# EMC Test Report

Report No.: AGC05443260895ER01

| | | |
|---|---|---|
| **PRODUCT DESIGNATION** | : | Glass wireless charger |
| **BRAND NAME** | : | N/A |
| **MODEL NAME** | : | MO6761 |
| **APPLICANT** | : | MID OCEAN BRANDS B.V. |
| **DATE OF ISSUE** | : | Sep. 20, 2026 |
| **STANDARD(S)** | : | ETSI EN 301 489-1 V2.2.3 (2019-11)<br>ETSI EN 301 489-3 V2.3.2 (2023-01) |
| **REPORT VERSION** | : | V1.0 |

Attestation of Global Compliance (Shenzhen) Co., Ltd

Any report having not been signed by authorized approver, or having been altered without authorization, or having not been stamped by the "Dedicated Testing/Inspection Stamp" is deemed to be invalid. Copying or excerpting portion of, or altering the content of the report is not permitted without the written authorization of AGC. The test results presented in the report apply only to the tested sample. Any objections to report issued by AGC should be submitted to AGC within 15days after the issuance of the test report. Further enquiry of validity or verification of the test report should be addressed to AGC by agc01@agccert.com.

## REPORT REVISE RECORD

| Report Version | Revise Time | Issued Date | Valid Version | Notes |
|---|---|---|---|---|
| V1.0 | / | Sep. 20, 2026 | Valid | Initial release |

Any report having not been signed by authorized approver, or having been altered without authorization, or having not been stamped by the "Dedicated Testing/Inspection Stamp" is deemed to be invalid. Copying or excerpting portion of, or altering the content of the report is not permitted without the written authorization of AGC. The test results presented in the report apply only to the tested sample. Any objections to report issued by AGC should be submitted to AGC within 15days after the issuance of the test report. Further enquiry of validity or verification of the test report should be addressed to AGC by agc01@agccert.com.

# Table of contents

**1. General information ..... 5**
**2. Description of Test Configuration ..... 6**
2.1. Technical Description of Product ..... 6
2.2. Objective ..... 7
2.3. Test Items and The Results ..... 7
2.4. General Performance Criteria ..... 9
2.5. Description of Test Modes ..... 11
**3. Setup of Equipment Under Test ..... 12**
3.1. Setup Configuration of EUT ..... 12
3.2. Support Equipment ..... 12
**4. Test Facility ..... 13**
4.1. Address of The Test Laboratory ..... 13
4.2. Test Facility ..... 13
4.3. Environmental Conditions ..... 14
4.4. Measurement Uncertainty ..... 14
**5. Measurement of Conducted Emissions from the AC Mains Power Ports ..... 15**
5.1. Requirements ..... 15
5.2. Block Diagram of Test Setup ..... 15
5.3. Equipment Details ..... 16
5.4. Configuration of the EUT and method of measurement ..... 16
5.5. Test Summary ..... 17
**6. Measurement of Radiated Emissions at Frequencies up to 1 GHz ..... 19**
6.1. Requirements ..... 19
6.2. Block Diagram of Test Setup ..... 19
6.3. Equipment Details ..... 20
6.4. Configuration of the EUT and method of measurement ..... 20
6.5. Test Summary ..... 21
**7. Measurement of Electrostatic discharge ..... 23**
7.1. Requirements ..... 23
7.2. Block Diagram of Test Setup ..... 23
7.3. Equipment Details ..... 24
7.4. Configuration of the EUT and method of measurement ..... 24
7.5. Test Summary ..... 25
**8. Measurement of Radio-Frequency Electromagnetic Field ..... 26**

Any report having not been signed by authorized approver, or having been altered without authorization, or having not been stamped by the "Dedicated Testing/Inspection Stamp" is deemed to be invalid. Copying or excerpting portion of, or altering the content of the report is not permitted without the written authorization of AGC. The test results presented in the report apply only to the tested sample. Any objections to report issued by AGC should be submitted to AGC within 15days after the issuance of the test report. Further enquiry of validity or verification of the test report should be addressed to AGC by agc01@agccert.com.

8.1. Requirements ..... 26
8.2. Block Diagram of Test Setup ..... 27
8.3. Equipment Details ..... 28
8.4. Configuration of the EUT and method of measurement ..... 28
8.5. Test Summary ..... 29
**9. Measurement of Radio-frequency common mode ..... 30**
9.1. Requirements ..... 30
9.2. Block Diagram of Test Setup ..... 30
9.3. Equipment Details ..... 31
9.4. Configuration of the EUT and method of measurement ..... 31
9.5. Test Summary ..... 32
**10. Measurement of Fast Transients ..... 33**
10.1. Requirements ..... 33
10.2. Block Diagram of Test Setup ..... 33
10.3. Equipment Details ..... 34
10.4. Configuration of the EUT and method of measurement ..... 34
10.5. Test Summary ..... 35
**11. Measurement of Surges ..... 36**
11.1. Requirements ..... 36
11.2. Block Diagram of Test Setup ..... 36
11.3. Equipment Details ..... 37
11.4. Configuration of the EUT and method of measurement ..... 37
11.5. Test Summary ..... 37
**12. Measurement of Voltage dips and interruptions ..... 38**
12.1. Requirements ..... 38
12.2. Block Diagram of Test Setup ..... 38
12.3. Equipment Details ..... 39
12.4. Configuration of the EUT and method of measurement ..... 39
12.5. Test Summary ..... 39
**13. Photographs of Test Setup ..... 40**
**14. Photographs of EUT ..... 44**

Any report having not been signed by authorized approver, or having been altered without authorization, or having not been stamped by the "Dedicated Testing/Inspection Stamp" is deemed to be invalid. Copying or excerpting portion of, or altering the content of the report is not permitted without the written authorization of AGC. The test results presented in the report apply only to the tested sample. Any objections to report issued by AGC should be submitted to AGC within 15days after the issuance of the test report. Further enquiry of validity or verification of the test report should be addressed to AGC by agc01@agccert.com.

## 1. General information

| | |
|---|---|
| Applicant | MID OCEAN BRANDS B.V. |
| Address | Unit 711 716, 7/F., Tower A, 83 King Lam Street, Cheung Sha Wan, Kowloon, Hong Kong. |
| Manufacturer | MID OCEAN BRANDS B.V. |
| Address | Unit 711 716, 7/F., Tower A, 83 King Lam Street, Cheung Sha Wan, Kowloon, Hong Kong. |
| Factory | MID OCEAN BRANDS B.V. |
| Address | Unit 711 716, 7/F., Tower A, 83 King Lam Street, Cheung Sha Wan, Kowloon, Hong Kong. |
| Product Designation | Glass wireless charger |
| Brand Name | N/A |
| Test Model | MO6761 |
| Series Model(s) | N/A |
| Difference Description | N/A |
| Deviation from Standard | No any deviation from the test method |
| Date of Receipt | Sep. 01, 2026 |
| Date of Test | Sep. 01, 2026 to Sep. 20, 2026 |
| Test Result | Pass |
| Test Report Form No | AGCTR-ER-EMC-GEN-V1.0 |
| Note: The test results of this report relate only to the tested sample identified in this report. | |

| | | |
|---|---|---|
| Prepared By | Jack Gui<br>(Project Engineer) | Sep. 20, 2026 |
| Reviewed By | Bibo Zhang<br>(Reviewer) | Sep. 20, 2026 |
| Approved By | Angela Li<br>(Authorized Officer) | Sep. 20, 2026 |

Any report having not been signed by authorized approver, or having been altered without authorization, or having not been stamped by the "Dedicated Testing/Inspection Stamp" is deemed to be invalid. Copying or excerpting portion of, or altering the content of the report is not permitted without the written authorization of AGC. The test results presented in the report apply only to the tested sample. Any objections to report issued by AGC should be submitted to AGC within 15days after the issuance of the test report. Further enquiry of validity or verification of the test report should be addressed to AGC by agc01@agccert.com.

# 2. Description of Test Configuration

## 2.1. Technical Description of Product

| | |
|---|---|
| Product Designation | Glass wireless charger |
| Test Model | MO6761 |
| Hardware Version | V1.0 |
| Software Version | V1.0 |
| Input Rating | DC 5V/9V by adapter |
| Output Rating | Wireless output: 10W(max) |
| WPT Technical Parameters | |
| Operation Frequency Range | 110-205 kHz |
| Modulation Type | ASK |
| Antenna Designation | Coil Antenna |

Note: For more details, refer to the user's manual of the EUT.

Any report having not been signed by authorized approver, or having been altered without authorization, or having not been stamped by the "Dedicated Testing/Inspection Stamp" is deemed to be invalid. Copying or excerpting portion of, or altering the content of the report is not permitted without the written authorization of AGC. The test results presented in the report apply only to the tested sample. Any objections to report issued by AGC should be submitted to AGC within 15days after the issuance of the test report. Further enquiry of validity or verification of the test report should be addressed to AGC by agc01@agccert.com.

## 2.2. Objective

Perform Electro Magnetic Interference (EMI) and Electro Magnetic Susceptibility (EMS) tests for CE Marking.

## 2.3. Test Items and The Results

The tests were performed according to following standards:

| | |
|---|---|
| EN 301 489-1 V2.2.3 (2019-11) | Electro Magnetic Compatibility (EMC) standard for radio equipment and services; Part 1: Common technical requirements; Harmonized Standard for Electro Magnetic Compatibility |
| EN 301 489-3 V2.3.2 (2023-01) | Electro Magnetic Compatibility (EMC) standard for radio equipment and services; Part 3: Specific conditions for Short Range Devices (SRD) operating on frequencies between 9 kHz and 246 GHz; Harmonised Standard for Electro Magnetic Compatibility |

Test items are been completed as follows (ETSI EN 301489-1):

| Phenomenon | Application | Equipment test requirement | | |
|---|---|---|---|---|
| | | fixed use | vehicular use | portable use |
| Radiated emission | enclosure of ancillary equipment | applicable for stand alone testing | applicable for stand alone testing | applicable for stand alone testing |
| Conducted emission | DC power input/output port | applicable | applicable | not applicable |
| | AC mains input/output port | applicable | not applicable | not applicable |
| | Telecommunication port | applicable | not applicable | not applicable |
| Harmonic current emissions | AC mains input port | applicable | not applicable | not applicable |
| Voltage fluctuations and flicker | AC mains input port | applicable | not applicable | not applicable |
| RF electromagnetic Field (80 MHz to 6000 MHz) | enclosure | applicable | applicable | applicable |
| Electrostatic discharge | enclosure | applicable | not applicable | applicable |
| Fast Transients Common mode | signal, Telecommunication and control ports, | applicable | not applicable | not applicable |
| | DC and AC power ports | applicable | not applicable | not applicable |
| RF common mode 0, 15 MHz to 80 MHz | Signal telecommunication and control ports | applicable | applicable | not applicable |
| | DC and AC powerports | applicable | applicable | not applicable |
| transients and surges | DC power inputports | not applicable | applicable | not applicable |
| voltage dips and interruptions | AC mains powerinput ports | applicable | not applicable | not applicable |
| surges, line toline and line toground | AC mains power input ports, telecommunication ports | applicable | not applicable | not applicable |

Any report having not been signed by authorized approver, or having been altered without authorization, or having not been stamped by the "Dedicated Testing/Inspection Stamp" is deemed to be invalid. Copying or excerpting portion of, or altering the content of the report is not permitted without the written authorization of AGC. The test results presented in the report apply only to the tested sample. Any objections to report issued by AGC should be submitted to AGC within 15days after the issuance of the test report. Further enquiry of validity or verification of the test report should be addressed to AGC by agc01@agccert.com.

The EUT have been tested according to the applicable standards as referenced below:

| EMISSION (EN 301 489-1 §7.1) | | |
|---|---|---|
| Test items | Test Standard(s) | Verdict |
| Radiated Emission | EN 55032 | Pass |
| Conducted Emission, DC ports | EN 55032 | Not applicable |
| Conducted Emission, AC ports | EN 55032 | Pass |
| Conducted Emission, Telecom ports | EN 55032 | Not applicable |
| IMMUNITY (EN 301 489-1 §7.2) | | |
| Electrostatic Discharge | IEC 61000-4-2 [a] | Pass |
| Radiated RF Electromagnetic Field | IEC 61000-4-3 [a] | Pass |
| Electrical Fast Transient/Burst | IEC 61000-4-4 [a] | Pass |
| Transients and Surges, DC ports | ISO 7637-1, -2 | Not applicable |
| Surge Immunity, AC ports | IEC 61000-4-5 [a] | Pass |
| Radio-Frequency Common mode | IEC 61000-4-6 [a] | Pass |
| Voltage dips and interruptions | IEC 61000-4-11 [a] | Pass |

Note:
a. The applicable versions of the basic standards are defined in the standard which listed in the test specification.

Any report having not been signed by authorized approver, or having been altered without authorization, or having not been stamped by the "Dedicated Testing/Inspection Stamp" is deemed to be invalid. Copying or excerpting portion of, or altering the content of the report is not permitted without the written authorization of AGC. The test results presented in the report apply only to the tested sample. Any objections to report issued by AGC should be submitted to AGC within 15days after the issuance of the test report. Further enquiry of validity or verification of the test report should be addressed to AGC by agc01@agccert.com.

## 2.4. General Performance Criteria

- **Performance criteria for continuous phenomena**

  During the test, the equipment shall:
  - continue to operate as intended;
  - not unintentionally transmit;
  - not unintentionally change its operating state;
  - not unintentionally change critical stored data.

- **Performance criteria for transient phenomena**

- For all ports and transient phenomena with the exception described below, the following applies:
  - The application of the transient phenomena shall not result in a change of the mode of operation
  - (e.g. unintended transmission) or the loss of critical stored data.
  - After application of the transient phenomena, the equipment shall operate as intended.
- For surges applied to symmetrically operated wired network ports intended to be connected directly to outdoor lines the following criteria applies:
  - For products with only one symmetrical port intended for connection to outdoor lines, loss of function is allowed, provided the function is self-recoverable, or can be otherwise restored. Information stored in non-volatile memory, or protected by a battery backup, shall not be lost.
  - For products with more than one symmetrical port intended for connection to outdoor lines, loss of function on the port under test is allowed, provided the function is self-recoverable. Information stored in non-volatile memory, or protected by a battery backup, shall not be lost.
- For a 0 % residual voltage dip tests the following performance criteria apply:
  - The performance criteria for transient phenomena shall apply.
- For a 70 % residual voltage dip and voltage interruption tests, the following performance criteria apply:
  - in the case where the equipment is fitted with or connected to a battery back-up, the performance criteria for transient phenomena shall apply;
  - in the case where the equipment is powered solely from the AC mains supply (without the use of a parallel battery back-up) volatile user data may have been lost and if applicable the communication link need not to be maintained and lost functions should be recoverable by user or operator;
  - no unintentional responses shall occur at the end of the test, when the voltage is restored to nominal;
  - in the event of loss of function(s) or in the event of loss of user stored data, this fact shall be recorded.

Any report having not been signed by authorized approver, or having been altered without authorization, or having not been stamped by the "Dedicated Testing/Inspection Stamp" is deemed to be invalid. Copying or excerpting portion of, or altering the content of the report is not permitted without the written authorization of AGC. The test results presented in the report apply only to the tested sample. Any objections to report issued by AGC should be submitted to AGC within 15days after the issuance of the test report. Further enquiry of validity or verification of the test report should be addressed to AGC by agc01@agccert.com.

## ■ Performance Table

According to ETSI EN 301 489-3 standard, the general performance criteria are as follows:

| EN 301 489-3 Performance Criteria_SRD | | |
|---|---|---|
| Criteria | During Test | After Test |
| A | Operate as intended<br>No loss of function<br>No unintentional responses | Operate as intended<br>No loss of function<br>No degradation of performance<br>No loss of stored data or user programmable functions |
| B | May show loss of function<br>No unintentional responses | Operate as intended<br>Lost function(s) shall be self-recoverable<br>No degradation of performance<br>No loss of stored data or user programmable functions |
| • performance criterion A applies for immunity tests with phenomena of a continuous nature;<br>• performance criterion B applies for immunity tests with phenomena of a transient nature. | | |
| Where "operate as intended" or "no loss of function" is specified, the EUT shall demonstrate correct functioning as described in EN 301 489-3 clause 5.<br>Where the EUT has more than one mode of operation, an unplanned transition from one mode to another is considered as an unintentional response. The EUT shall be tested in sufficient modes to confirm there are no such unintentional responses. | | |

Any report having not been signed by authorized approver, or having been altered without authorization, or having not been stamped by the "Dedicated Testing/Inspection Stamp" is deemed to be invalid. Copying or excerpting portion of, or altering the content of the report is not permitted without the written authorization of AGC. The test results presented in the report apply only to the tested sample. Any objections to report issued by AGC should be submitted to AGC within 15days after the issuance of the test report. Further enquiry of validity or verification of the test report should be addressed to AGC by agc01@agccert.com.

## 2.5. Description of Test Modes

| No. | Test Mode Description |
|---|---|
| 1 | Full Load Mode (10W) |
| 2 | Half Load Mode (5W) |
| 3 | Null Load Mode (0W) |

Note: All modes are pre-tested for EMI and the worst mode is finally reflected.

Any report having not been signed by authorized approver, or having been altered without authorization, or having not been stamped by the "Dedicated Testing/Inspection Stamp" is deemed to be invalid. Copying or excerpting portion of, or altering the content of the report is not permitted without the written authorization of AGC. The test results presented in the report apply only to the tested sample. Any objections to report issued by AGC should be submitted to AGC within 15days after the issuance of the test report. Further enquiry of validity or verification of the test report should be addressed to AGC by agc01@agccert.com.

# 3. Setup of Equipment Under Test

## 3.1. Setup Configuration of EUT

See test photographs attached in Appendix I for the actual connections between EUT and support equipment.

## 3.2. Support Equipment

The EUT has been associated with peripherals and configuration operated in a manner tended to maximize its emission characteristics in a typical application.

The following peripheral devices and interface cables were connected during the measurement:

☒ Test Accessories Come From The Laboratory

| Device Type | Manufacturer | Model Name | Serial No. | Data Cable | Power Cable |
|---|---|---|---|---|---|
| Wireless Charging Load | YBZ | N/A | -- | -- | Support 5W,7.5W,10W,15W |
| Adapter | Apple | A2452 | -- | -- | -- |

☐ Test Accessories Come From The Manufacturer

| Device Type | Manufacturer | Model Name | Serial No. | Data Cable | Power Cable |
|---|---|---|---|---|---|
| -- | -- | -- | -- | -- | -- |

Any report having not been signed by authorized approver, or having been altered without authorization, or having not been stamped by the "Dedicated Testing/Inspection Stamp" is deemed to be invalid. Copying or excerpting portion of, or altering the content of the report is not permitted without the written authorization of AGC. The test results presented in the report apply only to the tested sample. Any objections to report issued by AGC should be submitted to AGC within 15days after the issuance of the test report. Further enquiry of validity or verification of the test report should be addressed to AGC by agc01@agccert.com.

# 4. Test Facility

## 4.1. Address of The Test Laboratory

Laboratory: Attestation of Global Compliance (Shenzhen) Co., Ltd.

Address: 1-2/F, Building 19, Junfeng Industrial Park, Chongqing Road, Heping Community, Fuhai Street, Bao'an District, Shenzhen, Guangdong, China

## 4.2. Test Facility

The test facility is recognized, certified, or accredited by the following organizations:

**CNAS-Lab Code: L5488**

Attestation of Global Compliance (Shenzhen) Co., Ltd. has been assessed and proved to follow CNAS-CL01 Accreditation Criteria for Testing and Calibration Laboratories (identical to ISO/IEC17025: 2017 General Requirements for the Competence of Testing and Calibration Laboratories.)

**A2LA-Lab Cert. No.: 5054.02**

Attestation of Global Compliance (Shenzhen) Co., Ltd. EMC Laboratory has been accredited by A2LA for technical competence in the field of electrical testing, and proved to follow ISO/IEC 17025: 2017 General Requirements for the Competence of Testing and Calibration Laboratories and any additional program requirements in the identified field of testing.

**FCC-Registration No.: 975832**

Attestation of Global Compliance (Shenzhen) Co., Ltd. EMC Laboratory has been registered and fully described in a report filed with the FCC (Federal Communications Commission). The acceptance letter from the FCC is maintained in our files with Registration 975832.

**IC-Registration No.: 24842(CAB identifier: CN0063)**

Attestation of Global Compliance (Shenzhen) Co., Ltd. EMC Laboratory has been registered and fully described in a report filed with the Certification and Engineering Bureau of Industry Canada. The acceptance letter from the IC is maintained in our files with Registration 24842.

Any report having not been signed by authorized approver, or having been altered without authorization, or having not been stamped by the "Dedicated Testing/Inspection Stamp" is deemed to be invalid. Copying or excerpting portion of, or altering the content of the report is not permitted without the written authorization of AGC. The test results presented in the report apply only to the tested sample. Any objections to report issued by AGC should be submitted to AGC within 15days after the issuance of the test report. Further enquiry of validity or verification of the test report should be addressed to AGC by agc01@agccert.com.

### 4.3. Environmental Conditions

| | Normal Conditions |
|---|---|
| Temperature range (℃) | 15 - 35 |
| Relative humidity range | 45 % - 85 % |
| Pressure range (kPa) | 86 - 106 |

### 4.4. Measurement Uncertainty

The uncertainty is calculated using the methods suggested in the “Guide to the Expression of Uncertainty in Measurement” (GUM) published by ISO.

- Uncertainty of Conducted Emission, Uc = ±2.9dB
- Uncertainty of Radiated Emission below 1GHz, Uc = ±3.9dB

Any report having not been signed by authorized approver, or having been altered without authorization, or having not been stamped by the “Dedicated Testing/Inspection Stamp” is deemed to be invalid. Copying or excerpting portion of, or altering the content of the report is not permitted without the written authorization of AGC. The test results presented in the report apply only to the tested sample. Any objections to report issued by AGC should be submitted to AGC within 15days after the issuance of the test report. Further enquiry of validity or verification of the test report should be addressed to AGC by agc01@agccert.com.

# 5. Measurement of Conducted Emissions from the AC Mains Power Ports

## 5.1. Requirements

Requirements for conducted emissions, low voltage AC mains port

| Network device | Detector type/ bandwidth | Frequency Range (MHz) | Limits dB(μV) | Measurement specifications |
|---|---|---|---|---|
| AMN | Quasi-peak/ 9kHz | 0.15 to 0.5 | 66 to 56 | Instrumentation: CISPR 16-1-1, Clauses 4, 5 and 7<br>Networks: CISPR 16-1-2, Clause 4<br>Method: CISPR 16-2-1, Clause 7<br>Set-up: CISPR 16-2-1, Clause 7 |
| | | 0.5 to 5 | 56 | |
| | | 5 to 30 | 60 | |
| | Average/ 9kHz | 0.15 to 0.5 | 56 to 46 | |
| | | 0.5 to 5 | 46 | |
| | | 5 to 30 | 50 | |

**Note:**
1. The lower limit shall apply at the transition frequency.
2. The limit decreases linearly with the logarithm of the frequency in the range 0.15 to 0.5MHz.

## 5.2. Block Diagram of Test Setup

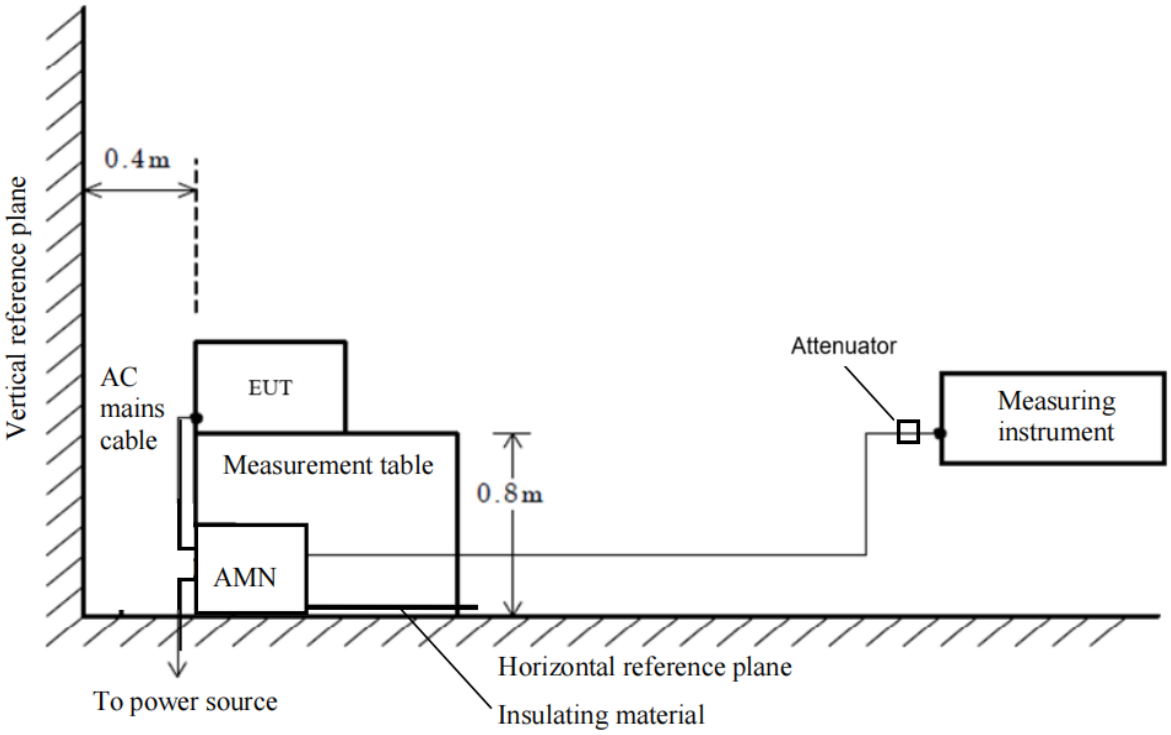


Any report having not been signed by authorized approver, or having been altered without authorization, or having not been stamped by the "Dedicated Testing/Inspection Stamp" is deemed to be invalid. Copying or excerpting portion of, or altering the content of the report is not permitted without the written authorization of AGC. The test results presented in the report apply only to the tested sample. Any objections to report issued by AGC should be submitted to AGC within 15days after the issuance of the test report. Further enquiry of validity or verification of the test report should be addressed to AGC by agc01@agccert.com.

## 5.3. Equipment Details

Measuring Instruments

| Instruments No. | Instruments | Manufacturer | Model | S/N | Cal. Date | Cal. Due |
|---|---|---|---|---|---|---|
| AGC-EM-E116 | Test Receiver | R&S | ESCI | 100034 | 2026-05-20 | 2027-05-19 |
| AGC-EM-E023 | Artificial Mains Network | R&S | ESH2-Z5 | 100086 | 2026-05-19 | 2027-05-18 |
| AGC-EM-A171 | Attenuator | Mini-Circuits | UNAT-10A+ | N/A | 2026-01-13 | 2028-01-12 |

Measuring Software

| Software No. | Software Name | Manufacturer | Details |
|---|---|---|---|
| AGC-EM-S001 | ES-K1 | R&S | For EMC Measurement, Version 1.71 |

## 5.4. Configuration of the EUT and method of measurement

a. The EUT was set up as per the test configuration to simulate typical actual usage per the user's manual. When the EUT is a tabletop system, the EUT was placed on the top surface of a measurement table, 0.8 m high from the horizontal reference plane, and was positioned at a distance of 0.4 m away from the vertical reference plane. When the EUT is a floor-standing equipment, it is placed on the ground plane which has a 10 cm non-conductive covering to insulate the EUT from the ground plane.

b. Support equipment, if needed, was placed as per CISPR 16-2-1.

c. All I/O cables were positioned to simulate typical actual usage as per CISPR 16-2-1.

d. The EMI receiver measured the emission levels emanating from the EUT into the AC Mains through an Artificial Mains Network (AMN) and an attenuator used on the front end of the EMI receiver. Testing included measurements on all live and neutral lines.

e. The more description of the tests, the test methods, and the test set-ups are given in the applicable test standard.

f. Record at least six highest emissions relative to the limits at each frequency of interest unless the emission is 10 dB or greater below the limit.

g. A conducted emission is calculated by the following equation:
   - Measurement Level (dBμV) = Receiver reading (dBμV) + Tansd (dB)
   - Transd(dB)= AMN Factor(dB)+Cable Loss(dB)+Attenuation(dB)
   - Margin= Limit-Level

Any report having not been signed by authorized approver, or having been altered without authorization, or having not been stamped by the "Dedicated Testing/Inspection Stamp" is deemed to be invalid. Copying or excerpting portion of, or altering the content of the report is not permitted without the written authorization of AGC. The test results presented in the report apply only to the tested sample. Any objections to report issued by AGC should be submitted to AGC within 15days after the issuance of the test report. Further enquiry of validity or verification of the test report should be addressed to AGC by agc01@agccert.com.

### 5.5. Test Summary

| | | | |
|---|---|---|---|
| Test Engineer | Alex Yang | Temperature | 21.6 °C |
| Test Date | 2026-09-14 | Air Pressure | 985 Mbar |
| Worst Mode | Mode 1 | Relative Humidity | 52.2 % |
| Verdict | Pass | | |

Test graph and data for Conducted Emission

Test Mode: Mode 1

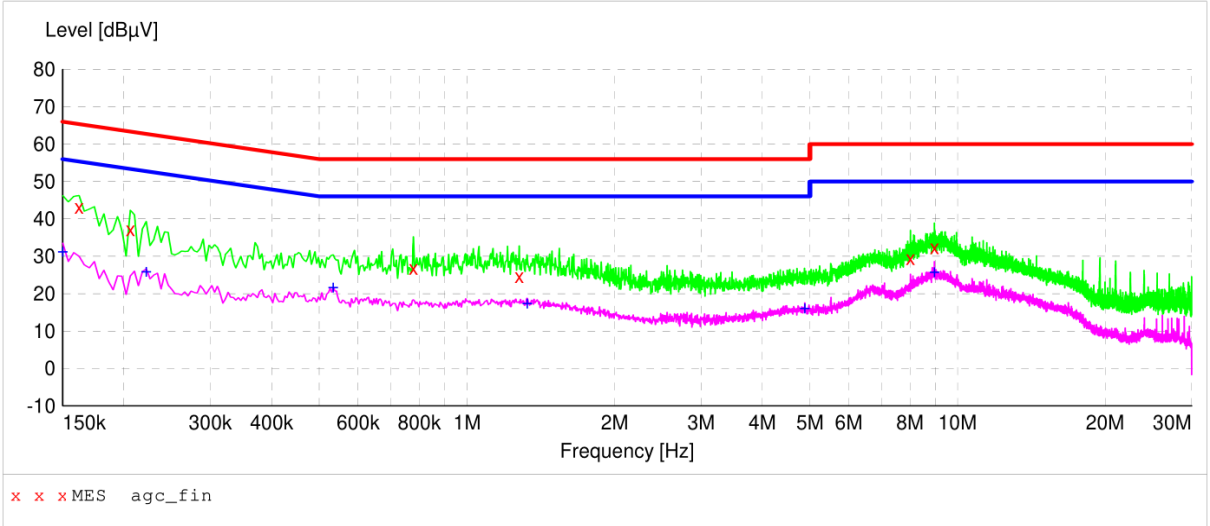


| Frequency [MHz] | Level [dBµV] | Factor [dB] | Limit [dBµV] | Margin [dB] | Detector | Line |
|---|---|---|---|---|---|---|
| 0.162000 | 43.2 | 6.1 | 65.4 | 22.2 | QP | L1 |
| 0.206000 | 37.2 | 6.1 | 63.4 | 26.2 | QP | L1 |
| 0.778000 | 26.9 | 6.2 | 56.0 | 29.1 | QP | L1 |
| 1.278000 | 24.7 | 6.2 | 56.0 | 31.3 | QP | L1 |
| 8.014000 | 29.5 | 6.6 | 60.0 | 30.5 | QP | L1 |
| 8.970000 | 32.4 | 6.6 | 60.0 | 27.6 | QP | L1 |
| 0.150000 | 31.7 | 6.1 | 56.0 | 24.3 | AV | L1 |
| 0.222000 | 26.4 | 6.1 | 52.7 | 26.3 | AV | L1 |
| 0.534000 | 22.2 | 6.2 | 46.0 | 23.8 | AV | L1 |
| 1.326000 | 17.9 | 6.2 | 46.0 | 28.1 | AV | L1 |
| 4.882000 | 16.6 | 6.3 | 46.0 | 29.4 | AV | L1 |
| 8.970000 | 26.3 | 6.6 | 50.0 | 23.7 | AV | L1 |

Any report having not been signed by authorized approver, or having been altered without authorization, or having not been stamped by the "Dedicated Testing/Inspection Stamp" is deemed to be invalid. Copying or excerpting portion of, or altering the content of the report is not permitted without the written authorization of AGC. The test results presented in the report apply only to the tested sample. Any objections to report issued by AGC should be submitted to AGC within 15days after the issuance of the test report. Further enquiry of validity or verification of the test report should be addressed to AGC by agc01@agccert.com.

| Test graph and data for Conducted Emission |
|---|
| Test Mode: Mode 1 |

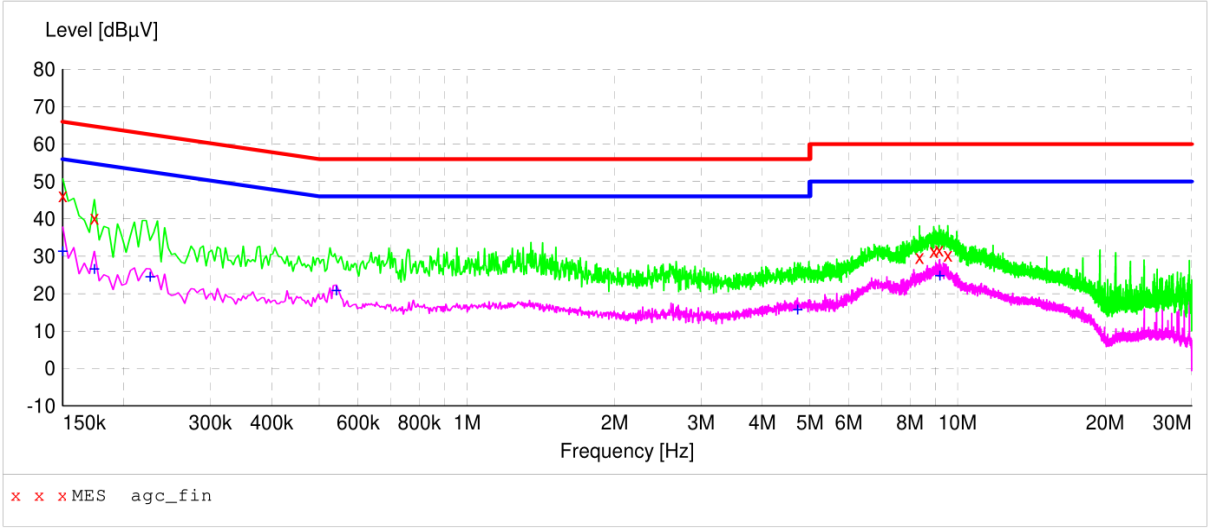


| Frequency [MHz] | Level [dBµV] | Factor [dB] | Limit [dBµV] | Margin [dB] | Detector | Line |
|---|---|---|---|---|---|---|
| 0.150000 | 46.3 | 6.1 | 66.0 | 19.7 | QP | N |
| 0.174000 | 40.3 | 6.1 | 64.8 | 24.5 | QP | N |
| 8.362000 | 29.8 | 6.6 | 60.0 | 30.2 | QP | N |
| 8.938000 | 31.4 | 6.6 | 60.0 | 28.6 | QP | N |
| 9.170000 | 31.7 | 6.6 | 60.0 | 28.3 | QP | N |
| 9.550000 | 30.4 | 6.6 | 60.0 | 29.6 | QP | N |
| 0.150000 | 31.9 | 6.1 | 56.0 | 24.1 | AV | N |
| 0.174000 | 27.2 | 6.1 | 54.8 | 27.6 | AV | N |
| 0.226000 | 25.1 | 6.1 | 52.6 | 27.5 | AV | N |
| 0.542000 | 21.4 | 6.2 | 46.0 | 24.6 | AV | N |
| 4.718000 | 16.3 | 6.3 | 46.0 | 29.7 | AV | N |
| 9.194000 | 25.4 | 6.6 | 50.0 | 24.6 | AV | N |

Any report having not been signed by authorized approver, or having been altered without authorization, or having not been stamped by the "Dedicated Testing/Inspection Stamp" is deemed to be invalid. Copying or excerpting portion of, or altering the content of the report is not permitted without the written authorization of AGC. The test results presented in the report apply only to the tested sample. Any objections to report issued by AGC should be submitted to AGC within 15days after the issuance of the test report. Further enquiry of validity or verification of the test report should be addressed to AGC by agc01@agccert.com.

# 6. Measurement of Radiated Emissions at Frequencies up to 1 GHz

## 6.1. Requirements

Requirements for radiated emissions at frequencies up to 1 GHz at 3m distance

| Test facility | Detector type/ bandwidth | Frequency Range (MHz) | Limits dB(μV/m) | Measurement specifications |
|---|---|---|---|---|
| SAC | Quasi-peak/ 120kHz | 30 to 230 | 40 | Instrumentation: CISPR 16-1-1, Clauses 4, 5<br>Antennas: CISPR 16-1-4, Clause 4.5<br>Test Site: CISPR 16-1-4, Clause 6<br>Method: CISPR 16-2-3, Clause 7.6 |
| | | 230 to 1000 | 47 | |
| **Note:**<br>1. The lower limit shall apply at the transition frequency. | | | | |

## 6.2. Block Diagram of Test Setup

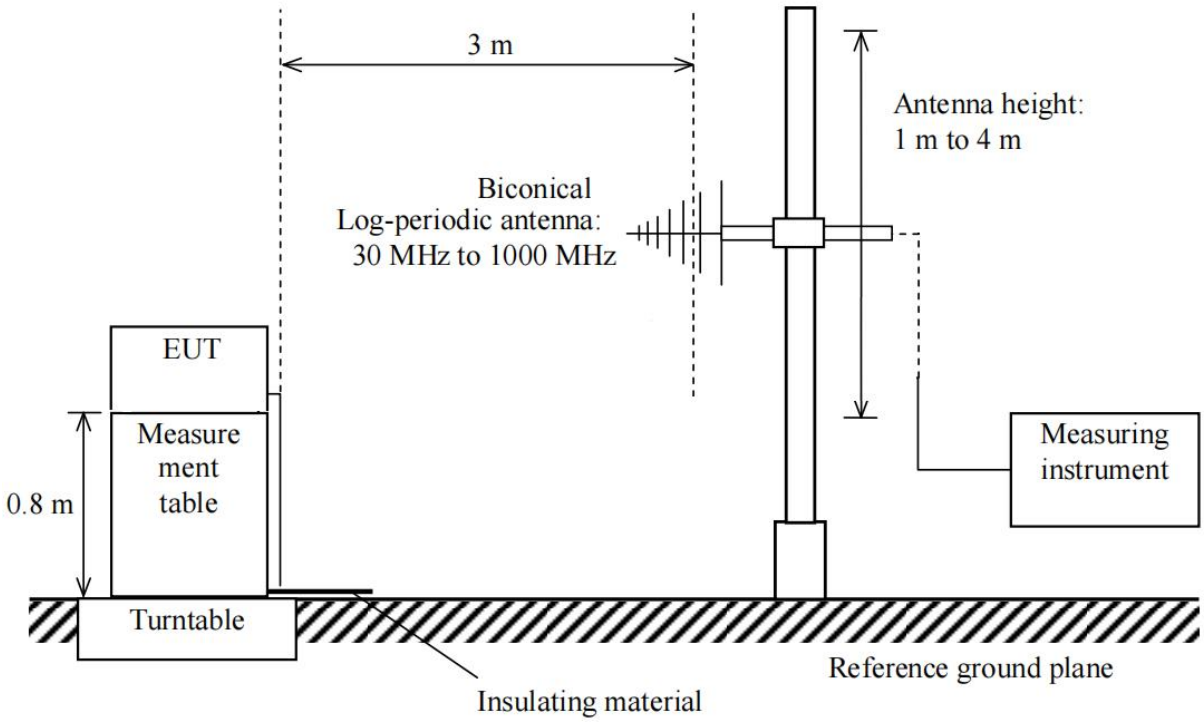


Any report having not been signed by authorized approver, or having been altered without authorization, or having not been stamped by the "Dedicated Testing/Inspection Stamp" is deemed to be invalid. Copying or excerpting portion of, or altering the content of the report is not permitted without the written authorization of AGC. The test results presented in the report apply only to the tested sample. Any objections to report issued by AGC should be submitted to AGC within 15days after the issuance of the test report. Further enquiry of validity or verification of the test report should be addressed to AGC by agc01@agccert.com.

## 6.3. Equipment Details

Measuring Instruments

| Instruments No. | Instruments | Manufacturer | Model | S/N | Cal. Date | Cal. Due |
|---|---|---|---|---|---|---|
| AGC-EM-E046 | Test Receiver | R&S | ESCI | 100096 | 2026-01-13 | 2027-01-12 |
| AGC-EM-E001 | Antenna | SCHWARZBECK | VULB9168 | D69250 | 2025-03-14 | 2027-03-13 |
| AGC-EM-A138 | Attenuator | East sheep | LM-XX-6-5W | N/A | 2025-05-16 | 2027-05-15 |

Measuring Software

| Software No. | Software Name | Manufacturer | Details |
|---|---|---|---|
| AGC-EM-S003 | EZ-EMC | FARA | For EMC Measurement, Version RA-03A |

## 6.4. Configuration of the EUT and method of measurement

a. The EUT was set up as per the test configuration to simulate typical actual usage per the user's manual. When the EUT is a tabletop system, the EUT was placed on the top surface of a measurement table, 0.8 m high from the horizontal reference plane. When the EUT is a floor-standing equipment, it is placed on the ground plane which has a 10 cm non-conductive covering to insulate the EUT from the ground plane.

b. Support equipment, if needed, was placed as per CISPR 16-2-3.

c. All I/O cables were positioned to simulate typical actual usage as per CISPR 16-2-3.

d. The maximum receiving level of radiated emissions from the EUT was measured while the turntable was rotated from 0° to 360° and the antenna height was scanned between 1 m and 4 m. The cables were laid out to attain the maximum level of radiated emissions.

e. The more description of the tests, the test methods, and the test set-ups are given in the applicable test standard.

f. Record at least six highest emissions relative to the limits at each frequency of interest unless the emission is 10 dB or greater below the limit.

g. A radiated emission is calculated by the following equation:
   - Measurement Level dB(μV/m) = Receiver reading dB(μV) + Factor(dB/m)
   - Factor(dB/m) = Antenna Factor(dB/m) + Cable Loss(dB)
   - Margin= Limit-Level

Any report having not been signed by authorized approver, or having been altered without authorization, or having not been stamped by the "Dedicated Testing/Inspection Stamp" is deemed to be invalid. Copying or excerpting portion of, or altering the content of the report is not permitted without the written authorization of AGC. The test results presented in the report apply only to the tested sample. Any objections to report issued by AGC should be submitted to AGC within 15days after the issuance of the test report. Further enquiry of validity or verification of the test report should be addressed to AGC by agc01@agccert.com.

### 6.5. Test Summary

| | | | |
|---|---|---|---|
| Test Engineer | Carl Duan | Temperature | 19.9 °C |
| Test Date | 2026-09-10 | Air Pressure | 985 Mbar |
| Worst Mode | Mode 1 | Relative Humidity | 51.0 % |
| Verdict | Pass | | |

Test graph and data for Radiated Emission up to 1GHz

Test Mode: Mode 1

| No. | Frequency [MHz] | Level [dBμV/m] | Factor dB | Limit [dBμV/m] | Margin dB | Detector | Polarity |
|---|---|---|---|---|---|---|---|
| 1 | 127.2176 | 24.18 | -23.87 | 40.00 | 15.82 | peak | Horizontal |
| 2 | 152.1297 | 26.39 | -21.84 | 40.00 | 13.61 | peak | Horizontal |
| 3 | 175.0368 | 30.13 | -22.84 | 40.00 | 9.87 | peak | Horizontal |
| 4 | 198.5880 | 25.54 | -24.62 | 40.00 | 14.46 | peak | Horizontal |
| 5 | 446.4141 | 23.50 | -19.76 | 47.00 | 23.5 | peak | Horizontal |
| 6 | 815.9678 | 26.46 | -12.47 | 47.00 | 20.54 | peak | Horizontal |

Any report having not been signed by authorized approver, or having been altered without authorization, or having not been stamped by the "Dedicated Testing/Inspection Stamp" is deemed to be invalid. Copying or excerpting portion of, or altering the content of the report is not permitted without the written authorization of AGC. The test results presented in the report apply only to the tested sample. Any objections to report issued by AGC should be submitted to AGC within 15days after the issuance of the test report. Further enquiry of validity or verification of the test report should be addressed to AGC by agc01@agccert.com.

| Test graph and data for Radiated Emission up to 1GHz | | | | | | | |
|---|---|---|---|---|---|---|---|
| Test Mode: Mode 1 | | | | | | | |
| 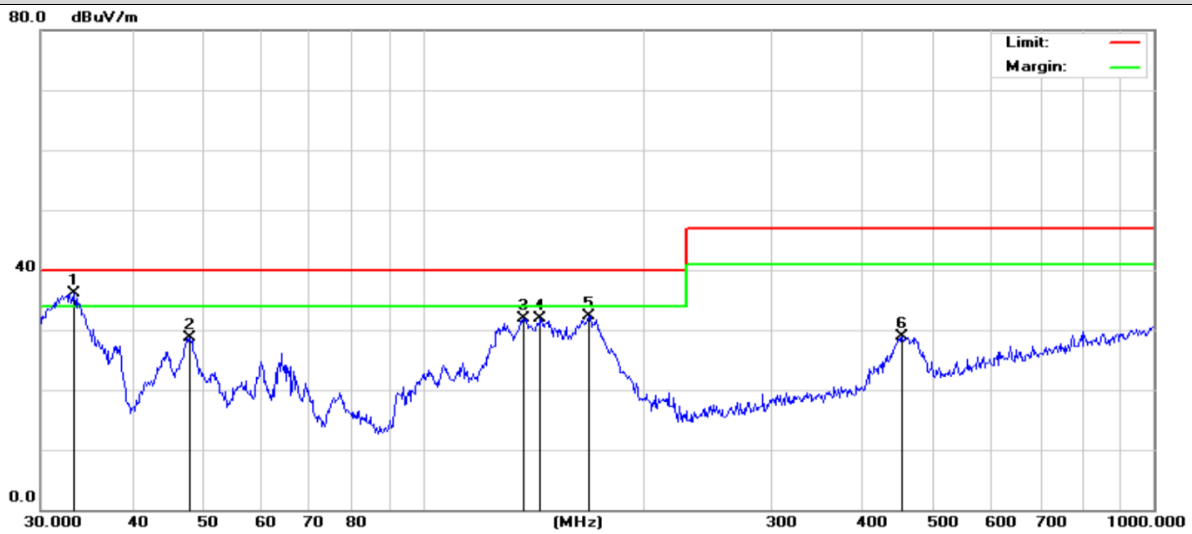  | | | | | | | |
| No. | Frequency [MHz] | Level [dBμV/m] | Factor dB | Limit [dBμV/m] | Margin dB | Detector | Polarity |
| 1 | 33.3279 | 36.05 | -23.71 | 40.00 | 3.95 | peak | Vertical |
| 2 | 47.9940 | 28.71 | -21.87 | 40.00 | 11.29 | peak | Vertical |
| 3 | 137.4202 | 31.83 | -21.56 | 40.00 | 8.17 | peak | Vertical |
| 4 | 144.8418 | 31.84 | -21.05 | 40.00 | 8.16 | peak | Vertical |
| 5 | 168.4138 | 32.27 | -21.49 | 40.00 | 7.73 | peak | Vertical |
| 6 | 452.7197 | 28.90 | -17.05 | 47.00 | 18.1 | peak | Vertical |

Any report having not been signed by authorized approver, or having been altered without authorization, or having not been stamped by the "Dedicated Testing/Inspection Stamp" is deemed to be invalid. Copying or excerpting portion of, or altering the content of the report is not permitted without the written authorization of AGC. The test results presented in the report apply only to the tested sample. Any objections to report issued by AGC should be submitted to AGC within 15days after the issuance of the test report. Further enquiry of validity or verification of the test report should be addressed to AGC by agc01@agccert.com.

# 7. Measurement of Electrostatic discharge

## 7.1. Requirements

| | |
|---|---|
| Port | Enclosure |
| Basic Standard | EN 61000-4-2 |
| Required Performance Criterion | The performance criteria for transient phenomena shall apply. |
| Test Level | ±8.0 kV (Air Discharge)<br>±4.0 kV (Contact Discharge)<br>±4.0 kV (Indirect Discharge) |
| Time Between Each Discharge | 1 second |
| Number of Discharge for Each Applied Voltage | 10 |

## 7.2. Block Diagram of Test Setup

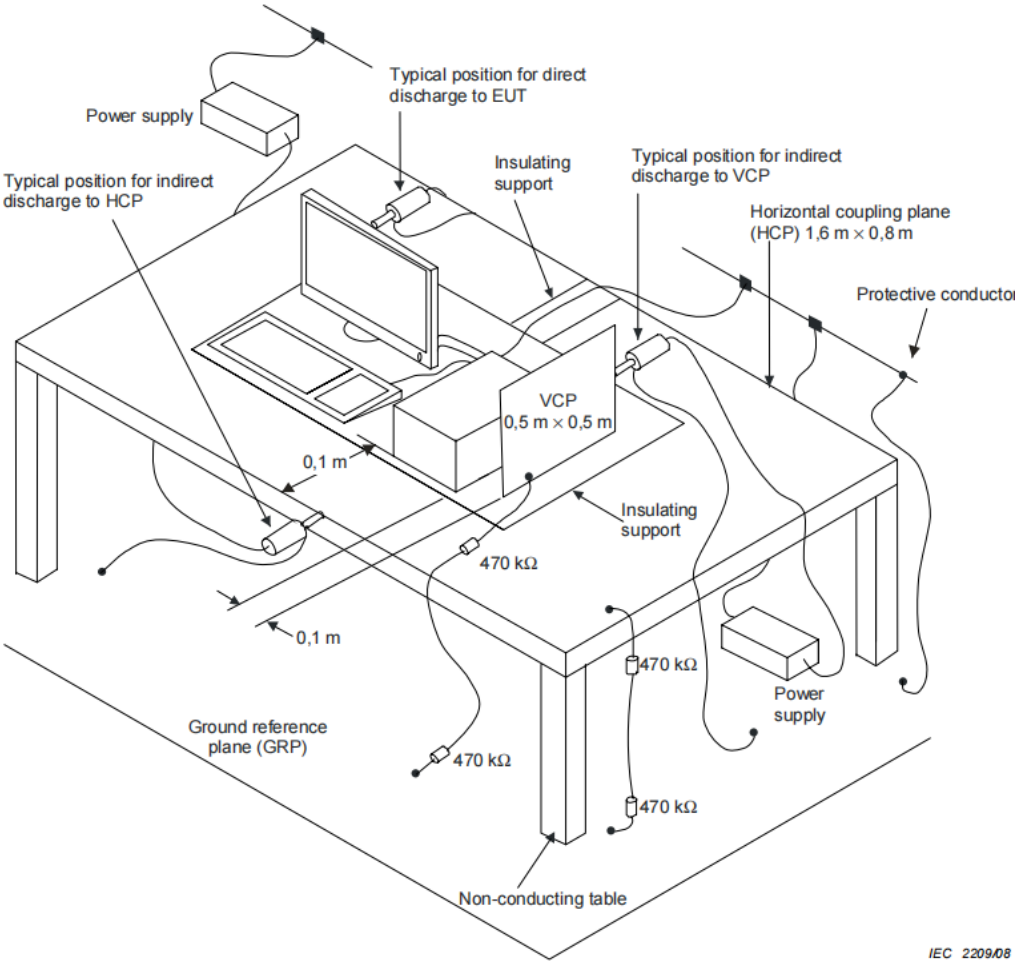


Any report having not been signed by authorized approver, or having been altered without authorization, or having not been stamped by the "Dedicated Testing/Inspection Stamp" is deemed to be invalid. Copying or excerpting portion of, or altering the content of the report is not permitted without the written authorization of AGC. The test results presented in the report apply only to the tested sample. Any objections to report issued by AGC should be submitted to AGC within 15days after the issuance of the test report. Further enquiry of validity or verification of the test report should be addressed to AGC by agc01@agccert.com.

### 7.3. Equipment Details

Measuring Instruments

| Instruments No. | Instruments | Manufacturer | Model | S/N | Cal. Date | Cal. Due |
|---|---|---|---|---|---|---|
| AGC-EM-E013 | ESD Simulator | Schaffner | NSG 438 | 782 | 2025-11-03 | 2026-11-02 |

Measuring Software

| Software No. | Software Name | Manufacturer | Details |
|---|---|---|---|
| -- | -- | -- | -- |

### 7.4. Configuration of the EUT and method of measurement

a. Electrostatic discharges were applied only to those points and surfaces of the EUT that are accessible to users during normal operation.
b. The test was performed with at least ten single discharges on the pre-selected points in the most sensitive polarity.
c. The time interval between two successive single discharges was at least 1 second.
d. The ESD generator was held perpendicularly to the surface to which the discharge was applied and the return cable was at least 0.2 meters from the EUT.
e. Contact discharges were applied to the non-insulating coating, with the pointed tip of the generator penetrating the coating and contacting the conducting substrate.
f. Air discharges were applied with the round discharge tip of the discharge electrode approaching the EUT as fast as possible (without causing mechanical damage) to touch the EUT. After each discharge, the ESD generator was removed from the EUT and re-triggered for a new single discharge. The test was repeated until all discharges were completed.
g. At least ten single discharges (in the most sensitive polarity) were applied to the Horizontal Coupling Plane at points on each side of the EUT. The ESD generator was positioned vertically at a distance of 0.1 meters from the EUT with the discharge electrode touching the HCP.
h. At least ten single discharges (in the most sensitive polarity) were applied to the center of one vertical edge of the Vertical Coupling Plane in sufficiently different positions that the four faces of the EUT were completely illuminated. The VCP (dimensions 0.5m×0.5m) was placed vertically to and 0.1 meters from the EUT.
i. The test results shall be classified in terms of the loss of function or degradation of performance of the equipment under test, relative to a performance criterion defined in the report.

Any report having not been signed by authorized approver, or having been altered without authorization, or having not been stamped by the "Dedicated Testing/Inspection Stamp" is deemed to be invalid. Copying or excerpting portion of, or altering the content of the report is not permitted without the written authorization of AGC. The test results presented in the report apply only to the tested sample. Any objections to report issued by AGC should be submitted to AGC within 15days after the issuance of the test report. Further enquiry of validity or verification of the test report should be addressed to AGC by agc01@agccert.com.

### 7.5. Test Summary

| | | | |
|---|---|---|---|
| Test Engineer | Alex Yang | Temperature | 22.3 °C |
| Test Date | 2026-09-11 | Air Pressure | 985 Mbar |
| Test Mode(s) | Mode 1/2/3 | Relative Humidity | 53.1 % |
| Verdict | Pass | | |

| Voltage | Coupling | Observation | Results |
|---|---|---|---|
| ±4kV | Contact Discharge | N/A | N/A |
| ±2KV, ±4kV, ±8kV | Air Discharge | No degradation of performance | Pass |
| ±4kV | Indirect Discharge HCP | No degradation of performance | Pass |
| ±4kV | Indirect Discharge VCP | No degradation of performance | Pass |

| Discharge Point: | |
|---|---|
| Blue line: Air Discharge | |
| 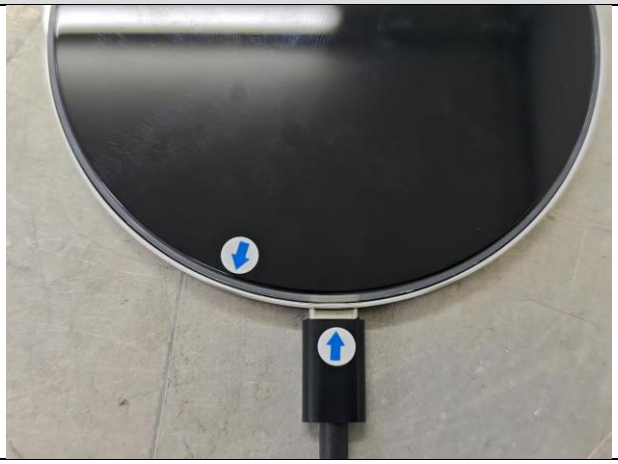 | N/A |

Note: No contact discharge method

Any report having not been signed by authorized approver, or having been altered without authorization, or having not been stamped by the "Dedicated Testing/Inspection Stamp" is deemed to be invalid. Copying or excerpting portion of, or altering the content of the report is not permitted without the written authorization of AGC. The test results presented in the report apply only to the tested sample. Any objections to report issued by AGC should be submitted to AGC within 15days after the issuance of the test report. Further enquiry of validity or verification of the test report should be addressed to AGC by agc01@agccert.com.

# 8. Measurement of Radio-Frequency Electromagnetic Field

## 8.1. Requirements

| | |
|---|---|
| Port | Enclosure |
| Basic Standard | EN 61000-4-3 |
| Required Performance Criterion | A |
| Test Level | 3V/m with 80% AM. 1kHz Modulation at 80 to 6000MHz |
| Antenna polarization | Vertical and Horizontal |
| Step size increment [a] | 1% |
| Dwell time [b] | ⩽5 seconds |
| Test Distance | 3m |
| EUT position facing antenna | Front side, back side, left side and right side |

Notes:

a. Recognizing that a 1% step size is preferred, the frequency range can be swept incrementally with a step size not exceeding 4% of the previous frequency with a test level of twice the value of the specified test level in order to reduce the testing time for equipment requiring testing in multiple configurations and/or long cycle times.

b. The dwell time at each frequency shall not be less than the time necessary for the EUT to be exercised and to be able to respond. However, the dwell time shall not exceed 5 seconds at each of the frequencies during the scan. The time to exercise the EUT is not interpreted as a total time of a program or a cycle but related to the reaction time in case of failure of the EUT.

Any report having not been signed by authorized approver, or having been altered without authorization, or having not been stamped by the "Dedicated Testing/Inspection Stamp" is deemed to be invalid. Copying or excerpting portion of, or altering the content of the report is not permitted without the written authorization of AGC. The test results presented in the report apply only to the tested sample. Any objections to report issued by AGC should be submitted to AGC within 15days after the issuance of the test report. Further enquiry of validity or verification of the test report should be addressed to AGC by agc01@agccert.com.

## 8.2. Block Diagram of Test Setup

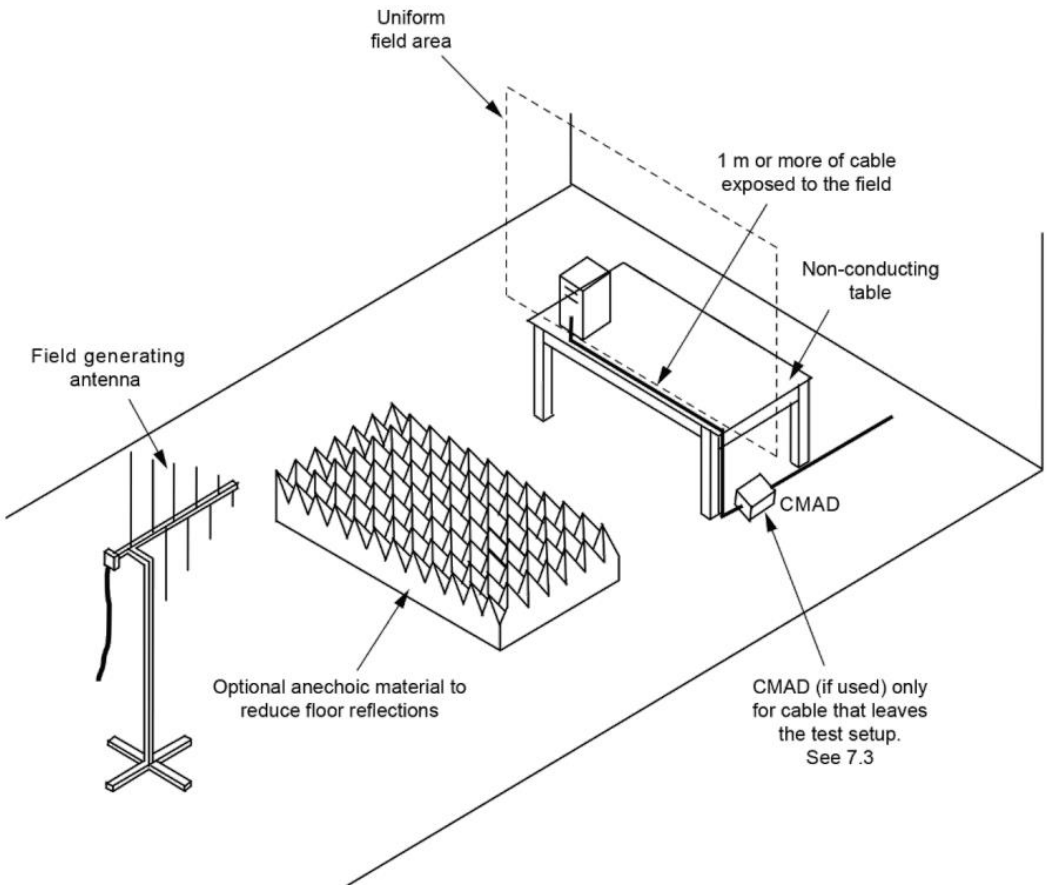


Any report having not been signed by authorized approver, or having been altered without authorization, or having not been stamped by the "Dedicated Testing/Inspection Stamp" is deemed to be invalid. Copying or excerpting portion of, or altering the content of the report is not permitted without the written authorization of AGC. The test results presented in the report apply only to the tested sample. Any objections to report issued by AGC should be submitted to AGC within 15days after the issuance of the test report. Further enquiry of validity or verification of the test report should be addressed to AGC by agc01@agccert.com.

## 8.3. Equipment Details

Measuring Instruments

| Instruments No. | Instruments | Manufacturer | Model | S/N | Cal. Date | Cal. Due |
|---|---|---|---|---|---|---|
| AGC-EM-E115 | Signal Generator | Aglient | N5182A | MY49060745 | 2026-01-13 | 2027-01-12 |
| AGC-EM-E041 | Directional Couple | Werlatonee | C6026-10 | 99482 | 2026-01-13 | 2028-01-12 |
| AGC-EM-E040 | Directional Couple | Werlatonee | C5571-10 | 99463 | 2026-01-13 | 2028-01-12 |
| AGC-EM-E035 | Power Probe | R&S | URV5-Z4 | 100124 | 2025-03-24 | 2027-03-23 |
| AGC-EM-E005 | Power Meter | R&S | NRVD | 8323781027 | 2025-03-24 | 2027-03-23 |
| AGC-EM-E016 | Power Amplifier | KALMUS | 7100LC | 04-02/17-06-001 | 2026-07-14 | 2027-07-13 |
| AGC-EM-E160 | Power Amplifier | TESEQ | CBA3G-100 | T43913 | 2026-05-19 | 2027-05-18 |
| AGC-EM-E080 | Power Amplifier | Rflight | NTWPA-2560100 | 17063183 | 2026-07-14 | 2027-07-13 |
| AGC-EM-E029 | Double-Ridged Waveguide Horn Antenna | ETS-LINDGREN | 3117 | 00034609 | 2026-03-14 | 2027-03-13 |
| AGC-EM-E028 | Wideband Antenna | ETS-LINDGREN | 3142C | 00060447 | N/A | N/A |

Measuring Software

| Software No. | Software Name | Manufacturer | Details |
|---|---|---|---|
| AGC-EM-S006 | TS+[JS35-RS] | Tonscend | For EMC Measurement, Version 2.0.1.8 |

## 8.4. Configuration of the EUT and method of measurement

a. The Equipment Under Test (EUT) was positioned within the Uniform Field Area (UFA) on a supporting table, ensuring a 3-meter separation from the transmitting antenna. This setup aligns with the calibrated square area, guaranteeing field uniformity during testing. The supporting units were strategically located outside the UFA to avoid any potential interference. Nonetheless, the cables connected to the EUT were intentionally exposed to the precisely calibrated field within the UFA.

b. Before testing, it will verify the proper operation of the test equipment/system. This verification will involve measuring the field strength at one point within the Uniform Field Area (UFA) at various frequencies.

c. The test shall be performed according to the above requirements and block diagram which shall specify the test setup.

d. The test results shall be classified in terms of the loss of function or degradation of performance of the equipment under test, relative to a performance criterion defined in the report.

Any report having not been signed by authorized approver, or having been altered without authorization, or having not been stamped by the "Dedicated Testing/Inspection Stamp" is deemed to be invalid. Copying or excerpting portion of, or altering the content of the report is not permitted without the written authorization of AGC. The test results presented in the report apply only to the tested sample. Any objections to report issued by AGC should be submitted to AGC within 15days after the issuance of the test report. Further enquiry of validity or verification of the test report should be addressed to AGC by agc01@agccert.com.

### 8.5. Test Summary

| | | | |
|---|---|---|---|
| Test Engineer | Carl Duan | Temperature | 19.9 °C |
| Test Date | 2026-09-10 | Air Pressure | 985 Mbar |
| Test Mode(s) | Mode 1/2/3 | Relative Humidity | 51.0 % |
| Verdict | Pass | | |

| Frequency | Exposed Side | Field Strength (V/m) | Observation | Performance |
|---|---|---|---|---|
| 80MHz to 6GHz | Front | 3V/m (rms) | No performance degradation | A |
| | Left | | No performance degradation | A |
| | Rear | | No performance degradation | A |
| | Right | | No performance degradation | A |

Any report having not been signed by authorized approver, or having been altered without authorization, or having not been stamped by the "Dedicated Testing/Inspection Stamp" is deemed to be invalid. Copying or excerpting portion of, or altering the content of the report is not permitted without the written authorization of AGC. The test results presented in the report apply only to the tested sample. Any objections to report issued by AGC should be submitted to AGC within 15days after the issuance of the test report. Further enquiry of validity or verification of the test report should be addressed to AGC by agc01@agccert.com.

# 9. Measurement of Radio-frequency common mode

## 9.1. Requirements

| | | | |
|---|---|---|---|
| Port | ☒AC mains power ports | ☐signal, wired network and control ports [a] | ☐DC power ports [a] |
| Basic Standard | EN 61000-4-6 | | |
| Required Performance Criterion | A | | |
| Test Level | 0.15 to 80 MHz, 3 V RMS (unmodulated), 80 % AM (1 kHz) | | |
| Step size increment [b] | 1% | | |
| Dwell time [c] | ⩽5 seconds | | |

Notes:

a. Applicable only to ports which, according to the manufacturer's specification, supports cable lengths greater than 3 m.

b. Recognizing that a 1% step size is preferred, the frequency range can be swept incrementally with a step size not exceeding 4% of the previous frequency with a test level of twice the value of the specified test level in order to reduce the testing time for equipment requiring testing in multiple configurations and/or long cycle times.

c. The dwell time at each frequency shall not be less than the time necessary for the EUT to be exercised and to be able to respond. However, the dwell time shall not exceed 5 seconds at each of the frequencies during the scan. The time to exercise the EUT is not interpreted as a total time of a program or a cycle but related to the reaction time in case of failure of the EUT.

## 9.2. Block Diagram of Test Setup

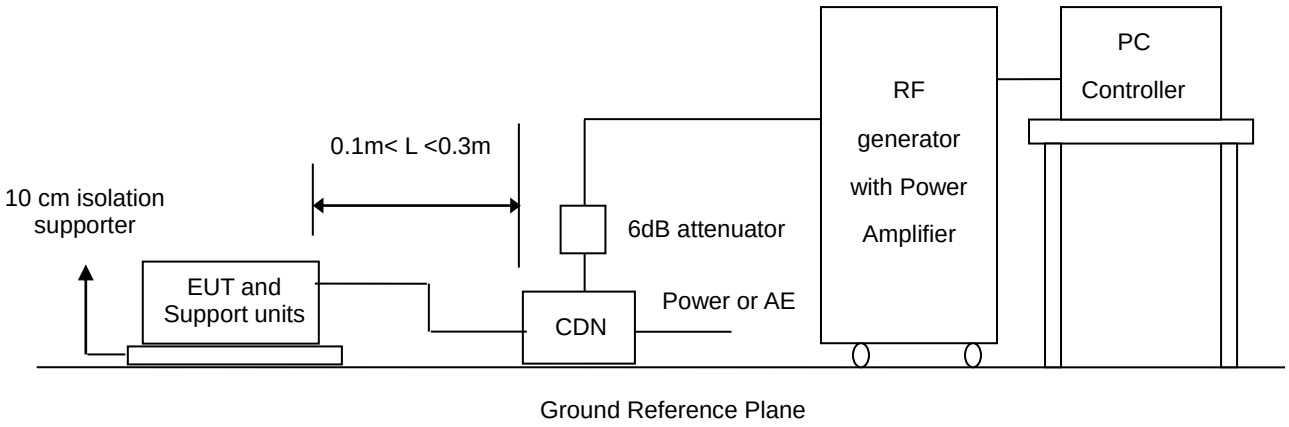


Any report having not been signed by authorized approver, or having been altered without authorization, or having not been stamped by the "Dedicated Testing/Inspection Stamp" is deemed to be invalid. Copying or excerpting portion of, or altering the content of the report is not permitted without the written authorization of AGC. The test results presented in the report apply only to the tested sample. Any objections to report issued by AGC should be submitted to AGC within 15days after the issuance of the test report. Further enquiry of validity or verification of the test report should be addressed to AGC by agc01@agccert.com.

## 9.3. Equipment Details

Measuring Instruments

| Instruments No. | Instruments | Manufacturer | Model | S/N | Cal. Date | Cal. Due |
|---|---|---|---|---|---|---|
| AGC-EM-E017 | Power Amplifier | AR | 75A250 | 18464 | 2026-07-14 | 2027-07-13 |
| AGC-EM-E161 | CDN | 3C TEST | CDN M2M3 | ES064002624028 | 2026-07-14 | 2027-07-13 |
| AGC-EM-A048 | Attenuator | ZHINAN | E-002 | N/A | 2026-07-14 | 2028-07-13 |
| AGC-EM-E035 | Power Probe | R&S | URV5-Z4 | 100124 | 2025-03-24 | 2027-03-23 |
| AGC-EM-E005 | Power Meter | R&S | NRVD | 8323781027 | 2025-03-24 | 2027-03-23 |
| AGC-EM-E040 | Directional Coupler | Werlatone | C5571-10 | 99463 | 2026-01-13 | 2028-01-12 |
| AGC-EM-E115 | Signal Generator | Aglient | N5182A | MY49060745 | 2026-01-13 | 2027-01-12 |

Measuring Software

| Software No. | Software Name | Manufacturer | Details |
|---|---|---|---|
| AGC-EM-S007 | TS+[JS35-CS] | Tonscend | For EMC measurement, version 2.0.1.7 |

## 9.4. Configuration of the EUT and method of measurement

a. The Equipment Under Test (EUT) shall be tested within its intended operating and climatic conditions.

b. The test generator and the coupling/decoupling network shall be placed directly on, and bonded to, the ground reference plane. The test shall be performed with the test generator connected to each of the coupling devices (CDN, EM clamp, current clamp) in turn. All other cables not under test shall either be disconnected (when functionally allowed) or provided with decoupling networks or unterminated CDNs only.

c. The test shall be performed according to the above requirements and block diagram which shall specify the test setup.

d. The test results shall be classified in terms of the loss of function or degradation of performance of the equipment under test, relative to a performance criterion defined in the report.

Any report having not been signed by authorized approver, or having been altered without authorization, or having not been stamped by the "Dedicated Testing/Inspection Stamp" is deemed to be invalid. Copying or excerpting portion of, or altering the content of the report is not permitted without the written authorization of AGC. The test results presented in the report apply only to the tested sample. Any objections to report issued by AGC should be submitted to AGC within 15days after the issuance of the test report. Further enquiry of validity or verification of the test report should be addressed to AGC by agc01@agccert.com.

### 9.5. Test Summary

| | | | |
|---|---|---|---|
| Test Engineer | Alex Yang | Temperature | 21.5 °C |
| Test Date | 2026-09-11 | Air Pressure | 985 Mbar |
| Test Mode(s) | Mode 1/2/3 | Relative Humidity | 54.2 % |
| Verdict | Pass | | |

| Test port | Test Level | Coupling method | Observation | Performance |
|---|---|---|---|---|
| AC Mains Input | 3 V | CDN | No performance degradation | A |

Any report having not been signed by authorized approver, or having been altered without authorization, or having not been stamped by the "Dedicated Testing/Inspection Stamp" is deemed to be invalid. Copying or excerpting portion of, or altering the content of the report is not permitted without the written authorization of AGC. The test results presented in the report apply only to the tested sample. Any objections to report issued by AGC should be submitted to AGC within 15days after the issuance of the test report. Further enquiry of validity or verification of the test report should be addressed to AGC by agc01@agccert.com.

# 10. Measurement of Fast Transients

## 10.1. Requirements

| Port | ☒AC mains power ports | ☐signal, wired network and control ports [a] | ☐DC power ports [a] |
|---|---|---|---|
| Basic Standard | EN 61000-4-4 | | |
| Required Performance Criterion | B | | |
| Test Level | 1 kV (peak) | 0.5 kV (peak) | 0.5 kV (peak) |
| Polarity | Positive/Negative | | |
| Impulse Frequency | 5kHz | | |
| Impulse wave shape | 5/50ns | | |
| Burst Duration | 15ms | | |
| Burst Period | 300ms | | |

Notes:
a. Applicable only to ports which, according to the manufacturer's specification, supports cable lengths greater than 3 m.

## 10.2. Block Diagram of Test Setup

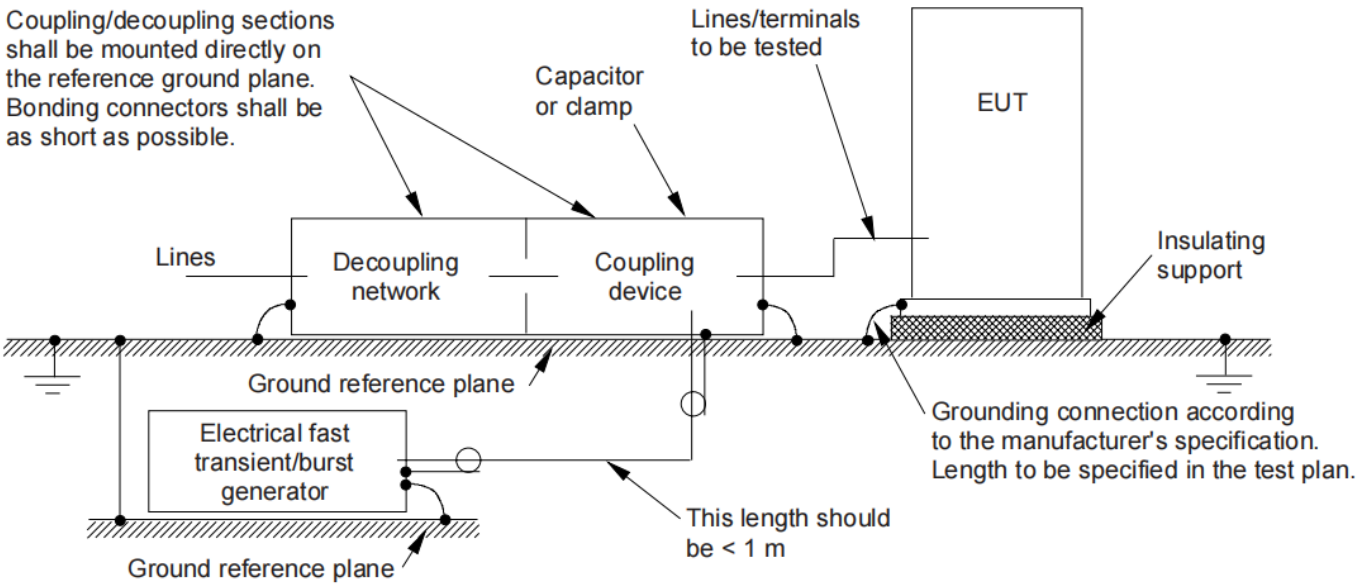


Any report having not been signed by authorized approver, or having been altered without authorization, or having not been stamped by the "Dedicated Testing/Inspection Stamp" is deemed to be invalid. Copying or excerpting portion of, or altering the content of the report is not permitted without the written authorization of AGC. The test results presented in the report apply only to the tested sample. Any objections to report issued by AGC should be submitted to AGC within 15days after the issuance of the test report. Further enquiry of validity or verification of the test report should be addressed to AGC by agc01@agccert.com.

### 10.3. Equipment Details

Measuring Instruments

| Instruments No. | Instruments | Manufacturer | Model | S/N | Cal. Date | Cal. Due |
|---|---|---|---|---|---|---|
| AGC-EM-E008 | EFT/Surge/DIPS Generator | Schaffner | Modula 6150 | 34437 | 2026-05-19 | 2027-05-18 |

Measuring Software

| Software No. | Software Name | Manufacturer | Details |
|---|---|---|---|
| AGC-EM-S009 | WinModula | Schaffner | For EFT/Surge/Dips Measurement, Version 2.31 c |

### 10.4. Configuration of the EUT and method of measurement

a. The Equipment Under Test (EUT), whether stationary floor-mounted or table top, and equipment designed to be mounted in other configurations, shall be placed on a ground reference plane and shall be insulated from it by an insulating support 0,1 m ± 0,01 m thick.

b. The test generator and the coupling/decoupling network shall be placed directly on, and bonded to, the ground reference plane.

c. The EUT shall be arranged and connected to satisfy its functional requirements, according to the equipment installation specifications. The minimum distance between the EUT and all other conductive structures (e.g. the walls of a shielded room), except the ground reference plane shall be more than 0,5 m. All cables to the EUT shall be placed on the insulation support 0,1 m above the ground reference plane. Cables not subject to electrical fast transients shall be routed as far as possible from the cable under test to minimize the coupling between the cables.

d. The test voltages shall be coupled to all of the EUT ports including those between two units of equipment involved in the test, unless the length of the interconnecting cable makes it impossible to test.

e. Either a direct coupling network or a capacitive clamp shall be used for the application of the test voltages.

f. The test results shall be classified in terms of the loss of function or degradation of performance of the equipment under test, relative to a performance criterion defined in the report.

Any report having not been signed by authorized approver, or having been altered without authorization, or having not been stamped by the "Dedicated Testing/Inspection Stamp" is deemed to be invalid. Copying or excerpting portion of, or altering the content of the report is not permitted without the written authorization of AGC. The test results presented in the report apply only to the tested sample. Any objections to report issued by AGC should be submitted to AGC within 15days after the issuance of the test report. Further enquiry of validity or verification of the test report should be addressed to AGC by agc01@agccert.com.

### 10.5. Test Summary

| | | | |
|---|---|---|---|
| Test Engineer | Alex Yang | Temperature | 22.9 °C |
| Test Date | 2026-09-11 | Air Pressure | 985 Mbar |
| Test Mode(s) | Mode 1/2/3 | Relative Humidity | 51.5 % |
| Verdict | Pass | | |

| Inject Line | Voltage(kV) | Inject Method | Observation | Performance |
|---|---|---|---|---|
| AC Lines | 0.5, 1 | Direct | No degradation of performance | A |

Any report having not been signed by authorized approver, or having been altered without authorization, or having not been stamped by the "Dedicated Testing/Inspection Stamp" is deemed to be invalid. Copying or excerpting portion of, or altering the content of the report is not permitted without the written authorization of AGC. The test results presented in the report apply only to the tested sample. Any objections to report issued by AGC should be submitted to AGC within 15days after the issuance of the test report. Further enquiry of validity or verification of the test report should be addressed to AGC by agc01@agccert.com.

# 11. Measurement of Surges

## 11.1. Requirements

| Port | ☒AC mains power ports [a] | ☐signal, wired network and control ports [b] | ☐DC network power ports [b] |
|---|---|---|---|
| Basic Standard | EN 61000-4-5 | | |
| Required Performance Criterion | B | B | B |
| Test Level | Line to line: 1 kV; Line to ground: 2 kV | shield to ground: 0.5 kV | Line to ground: 0.5 kV |
| Tr/Th | 1.2/50 (8/20) µs | | |
| Number of impulses | Five positive and five negative impulses | | |
| Time between successive impulses | 1 min | | |

Notes:

a. The number of pulses applied shall be as follows:
- Five positive pulses line-to-neutral at 90° phase.
- Five negative pulses line-to-neutral at 270° phase.

The following additional pulses are required only if the EUT has an earth connection or if the EUT is earthed via any AE:
- Five positive pulses line-to-earth at 90° phase.
- Five negative pulses line-to-earth at 270° phase.
- Five negative pulses neutral-to-earth at 90° phase.
- Five positive pulses neutral-to-earth at 270° phase.

b. Applicable only to ports which, according to the manufacturer's specification, supports cable lengths greater than 3 m.

## 11.2. Block Diagram of Test Setup

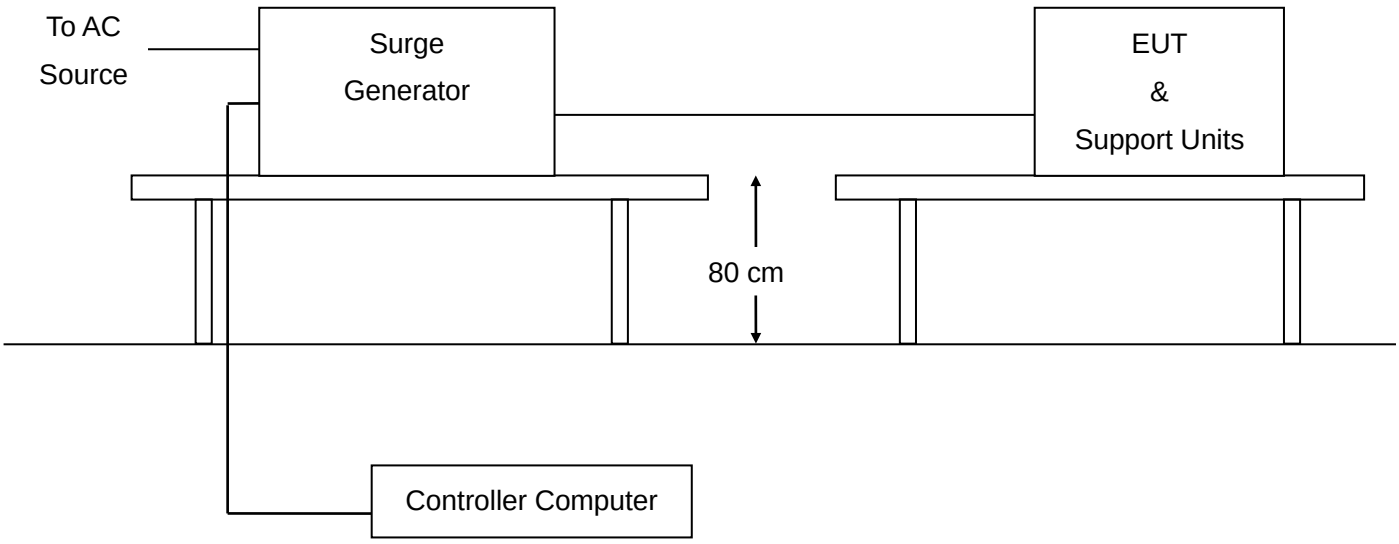


Any report having not been signed by authorized approver, or having been altered without authorization, or having not been stamped by the "Dedicated Testing/Inspection Stamp" is deemed to be invalid. Copying or excerpting portion of, or altering the content of the report is not permitted without the written authorization of AGC. The test results presented in the report apply only to the tested sample. Any objections to report issued by AGC should be submitted to AGC within 15days after the issuance of the test report. Further enquiry of validity or verification of the test report should be addressed to AGC by agc01@agccert.com.

### 11.3. Equipment Details

Measuring Instruments

| Instruments No. | Instruments | Manufacturer | Model | S/N | Cal. Date | Cal. Due |
|---|---|---|---|---|---|---|
| AGC-EM-E008 | EFT/Surge/DIPS Generator | Schaffner | Modula 6150 | 34437 | 2026-05-19 | 2027-05-18 |

Measuring Software

| Software No. | Software Name | Manufacturer | Details |
|---|---|---|---|
| AGC-EM-S009 | WinModula | Schaffner | For EFT/Surge/Dips Measurement, Version 2.31 c |

### 11.4. Configuration of the EUT and method of measurement

a. Verification shall be performed. It is preferable to perform the verification prior to the test.

b. The test shall be performed according to the above requirements and block diagram which shall specify the test setup.

c. When testing line-to-ground, the lines are tested individually in sequence, if there is no other specification.

d. The test procedure shall also consider the non-linear current-voltage characteristics of the equipment under test. Therefore, all lower test levels including the selected test level shall be tested.

e. The test results shall be classified in terms of the loss of function or degradation of performance of the equipment under test, relative to a performance criterion defined in the report.

### 11.5. Test Summary

| | | | |
|---|---|---|---|
| Test Engineer | Alex Yang | Temperature | 22.9 °C |
| Test Date | 2026-09-11 | Air Pressure | 985 Mbar |
| Test Mode(s) | Mode 1/2/3 | Relative Humidity | 51.5 % |
| Verdict | Pass | | |

| Test port | Coupling | Voltage(kV) | Observation | Performance |
|---|---|---|---|---|
| AC Mains Input | line-to-neutral | 0.5, 1 | No degradation of performance | A |

Any report having not been signed by authorized approver, or having been altered without authorization, or having not been stamped by the "Dedicated Testing/Inspection Stamp" is deemed to be invalid. Copying or excerpting portion of, or altering the content of the report is not permitted without the written authorization of AGC. The test results presented in the report apply only to the tested sample. Any objections to report issued by AGC should be submitted to AGC within 15days after the issuance of the test report. Further enquiry of validity or verification of the test report should be addressed to AGC by agc01@agccert.com.

# 12. Measurement of Voltage dips and interruptions

## 12.1. Requirements

| | | | | |
|---|---|---|---|---|
| Port | AC mains power ports | | | |
| Basic Standard | EN 61000-4-11 | | | |
| Required Performance Criterion | B | B | C | C |
| Residual voltage [a] | 0 % | 0 % | 70 % | 0 % |
| Number of cycles [b] | 0.5 | 1 | 25 for 50 Hz | 250 for 50 Hz |
| Variation/dip repetition | Sequence of three dips/interruptions with an interval of 10 seconds between each test | | | |

Notes:
a. Changes to occur at 0 degree crossover point of the voltage waveform. If the EUT does not demonstrate compliance when tested with 0 degree switching, the test shall be repeated with the switching occurring at both 90 degrees and 270 degrees. If the EUT satisfies these alternative requirements, then it fulfils the requirements.
b. Apply at only one supply frequency of the EUT.

## 12.2. Block Diagram of Test Setup

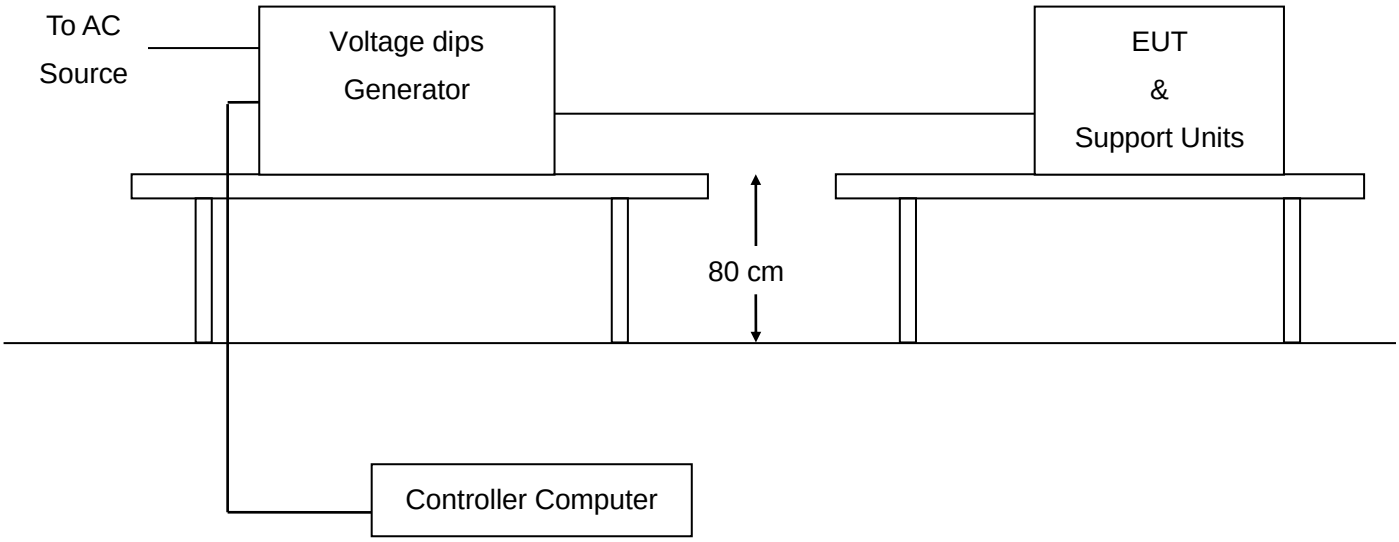


Any report having not been signed by authorized approver, or having been altered without authorization, or having not been stamped by the "Dedicated Testing/Inspection Stamp" is deemed to be invalid. Copying or excerpting portion of, or altering the content of the report is not permitted without the written authorization of AGC. The test results presented in the report apply only to the tested sample. Any objections to report issued by AGC should be submitted to AGC within 15days after the issuance of the test report. Further enquiry of validity or verification of the test report should be addressed to AGC by agc01@agccert.com.

### 12.3. Equipment Details

Measuring Instruments

| Instruments No. | Instruments | Manufacturer | Model | S/N | Cal. Date | Cal. Due |
|---|---|---|---|---|---|---|
| AGC-EM-E008 | EFT/Surge/DIPS Generator | Schaffner | Modula 6150 | 34437 | 2026-05-19 | 2027-05-18 |

Measuring Software

| Software No. | Software Name | Manufacturer | Details |
|---|---|---|---|
| AGC-EM-S009 | WinModula | Schaffner | For EFT/Surge/Dips measurement, version 2.31 c |

Auxiliary Apparatus

| Device Type | Manufacturer | Model Name | Serial No. | Data Cable | Power Cable |
|---|---|---|---|---|---|
| -- | -- | -- | -- | -- | -- |

### 12.4. Configuration of the EUT and method of measurement

a. The test shall be performed according to the above requirements and block diagram which shall specify the test setup.

b. The test results shall be classified in terms of the loss of function or degradation of performance of the equipment under test, relative to a performance criterion defined in the report.

### 12.5. Test Summary

| | | | |
|---|---|---|---|
| Test Engineer | Alex Yang | Temperature | 22.9 °C |
| Test Date | 2026-09-11 | Air Pressure | 985 Mbar |
| Test Mode(s) | Mode 1/2/3 | Relative Humidity | 51.5 % |
| Verdict | Pass | | |

| Test port | Residual voltage (%) | Cycles | Observation | Performance |
|---|---|---|---|---|
| AC Mains Input | 0 | 0.5 | No degradation of performance | A |
| | 0 | 1 | No degradation of performance | A |
| | 70 | 25 | No degradation of performance | A |
| | 0 | 250 | EUT power cycled | B |

Any report having not been signed by authorized approver, or having been altered without authorization, or having not been stamped by the "Dedicated Testing/Inspection Stamp" is deemed to be invalid. Copying or excerpting portion of, or altering the content of the report is not permitted without the written authorization of AGC. The test results presented in the report apply only to the tested sample. Any objections to report issued by AGC should be submitted to AGC within 15days after the issuance of the test report. Further enquiry of validity or verification of the test report should be addressed to AGC by agc01@agccert.com.

## 13. Photographs of Test Setup

Conducted emissions from the AC mains power ports

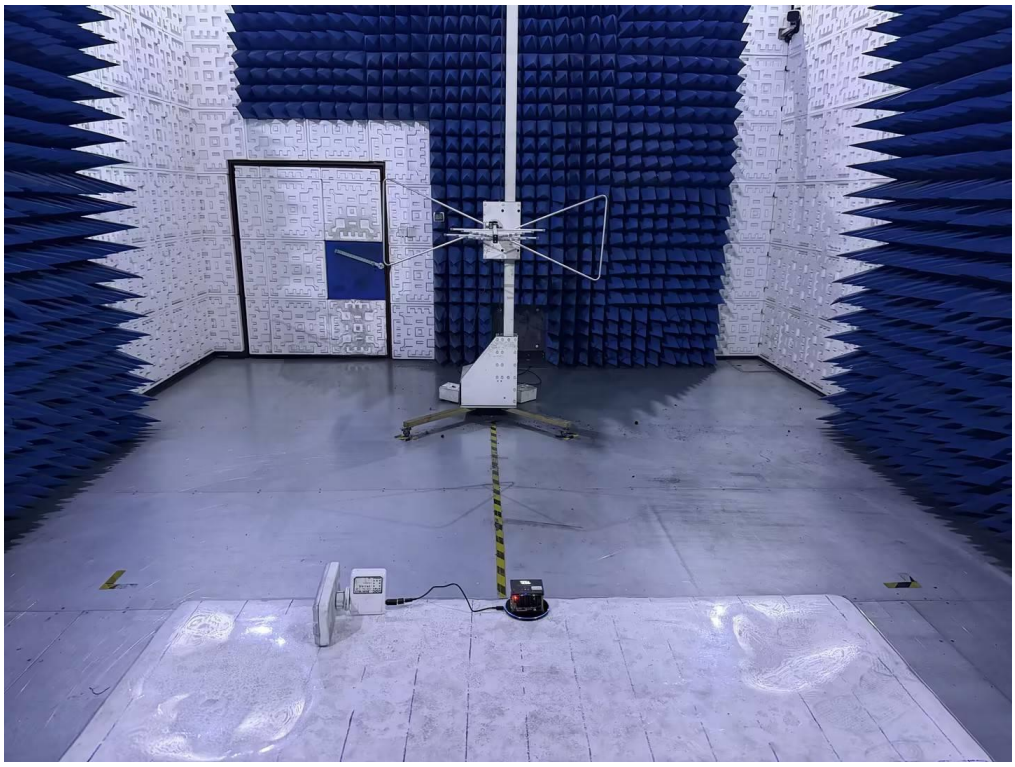

Radiated emissions at frequencies up to 1 GHz

Any report having not been signed by authorized approver, or having been altered without authorization, or having not been stamped by the "Dedicated Testing/Inspection Stamp" is deemed to be invalid. Copying or excerpting portion of, or altering the content of the report is not permitted without the written authorization of AGC. The test results presented in the report apply only to the tested sample. Any objections to report issued by AGC should be submitted to AGC within 15days after the issuance of the test report. Further enquiry of validity or verification of the test report should be addressed to AGC by agc01@agccert.com.

Electrostatic discharge

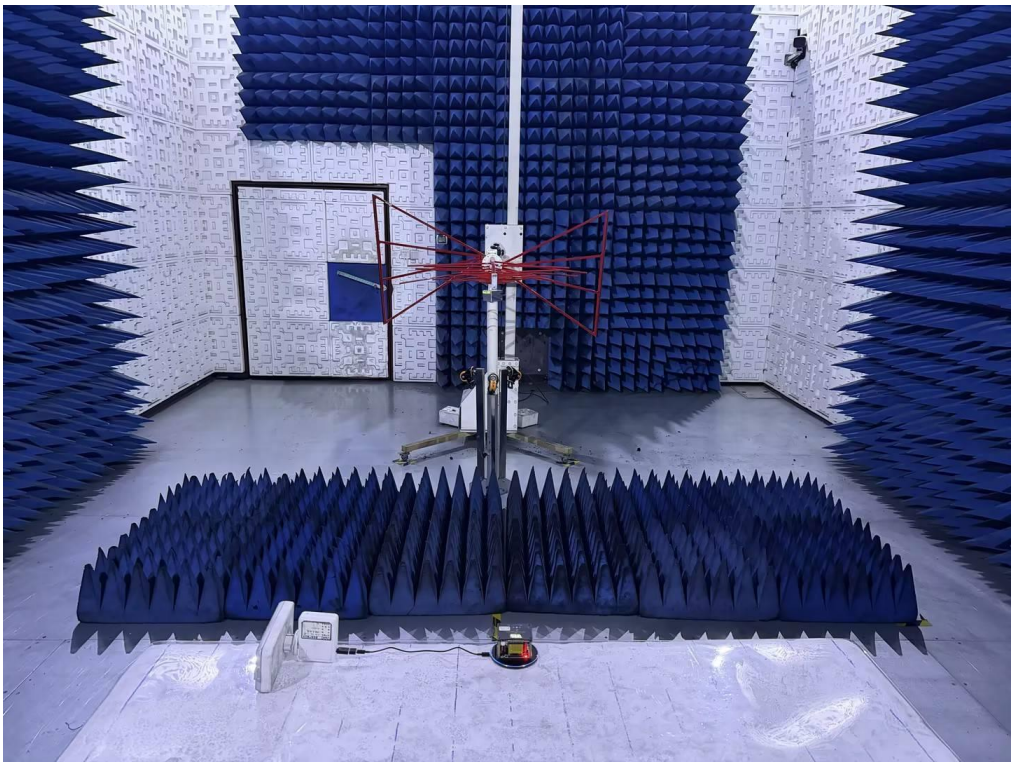

Radio-frequency electromagnetic field up to 1 GHz

Any report having not been signed by authorized approver, or having been altered without authorization, or having not been stamped by the "Dedicated Testing/Inspection Stamp" is deemed to be invalid. Copying or excerpting portion of, or altering the content of the report is not permitted without the written authorization of AGC. The test results presented in the report apply only to the tested sample. Any objections to report issued by AGC should be submitted to AGC within 15days after the issuance of the test report. Further enquiry of validity or verification of the test report should be addressed to AGC by agc01@agccert.com.

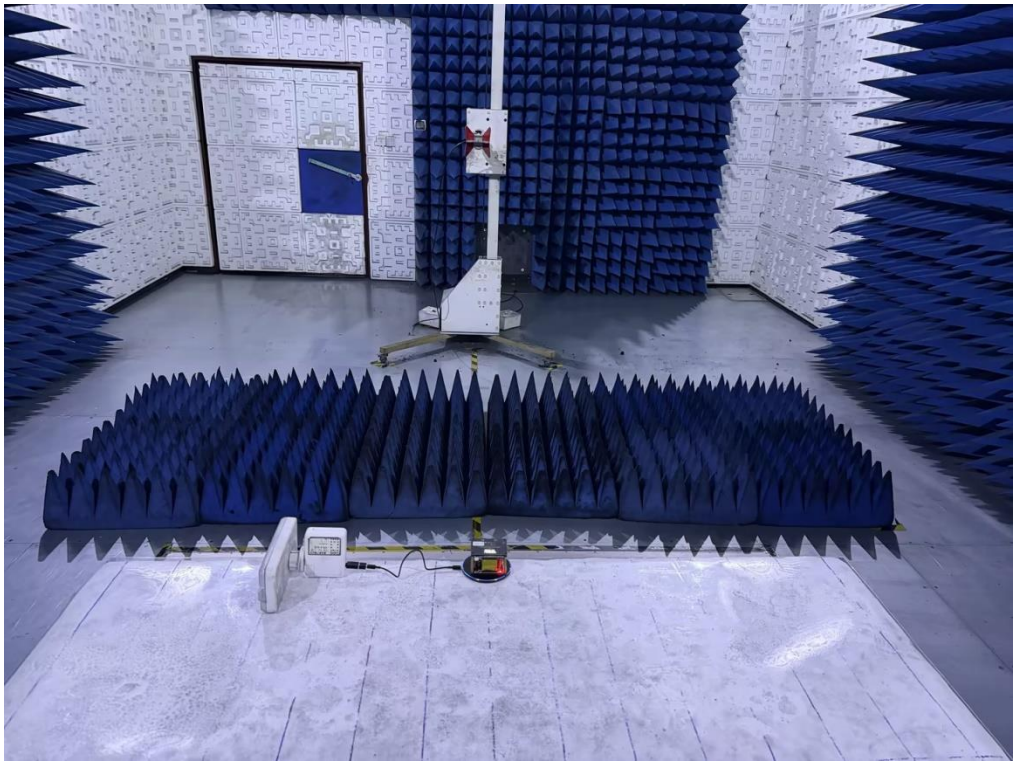

Radio-frequency electromagnetic field above 1 GHz

Radio-frequency common mode at the AC mains power ports

Any report having not been signed by authorized approver, or having been altered without authorization, or having not been stamped by the "Dedicated Testing/Inspection Stamp" is deemed to be invalid. Copying or excerpting portion of, or altering the content of the report is not permitted without the written authorization of AGC. The test results presented in the report apply only to the tested sample. Any objections to report issued by AGC should be submitted to AGC within 15days after the issuance of the test report. Further enquiry of validity or verification of the test report should be addressed to AGC by agc01@agccert.com.

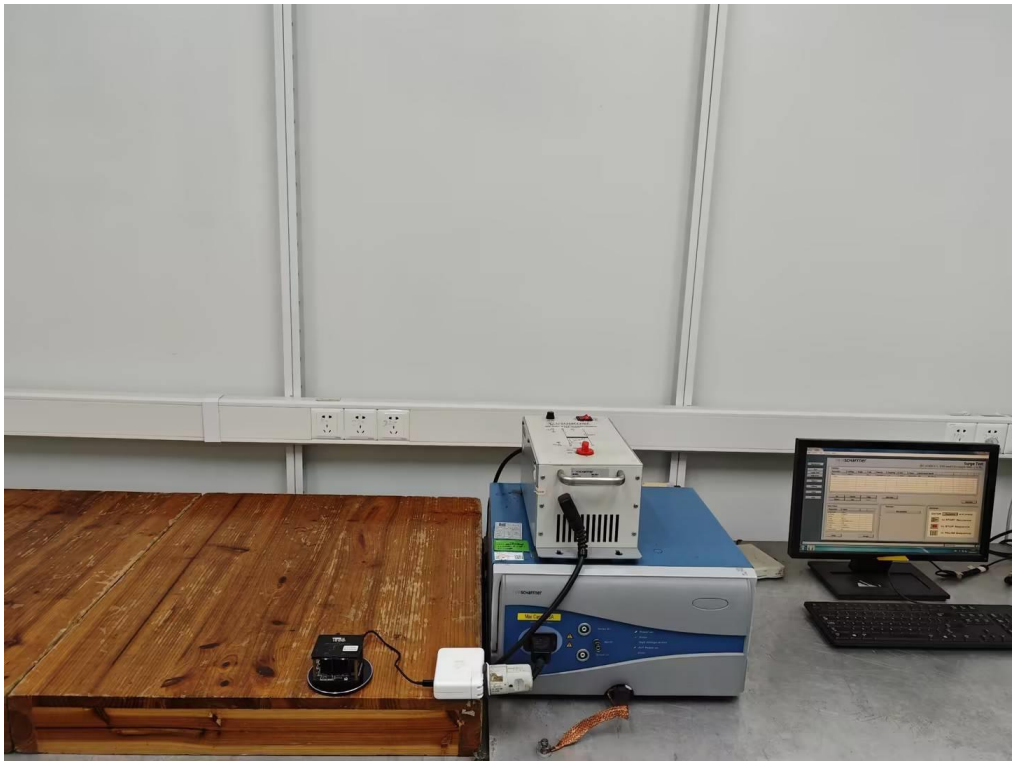

Fast transients/Surges/ Voltage dips at the AC mains power ports

Any report having not been signed by authorized approver, or having been altered without authorization, or having not been stamped by the "Dedicated Testing/Inspection Stamp" is deemed to be invalid. Copying or excerpting portion of, or altering the content of the report is not permitted without the written authorization of AGC. The test results presented in the report apply only to the tested sample. Any objections to report issued by AGC should be submitted to AGC within 15days after the issuance of the test report. Further enquiry of validity or verification of the test report should be addressed to AGC by agc01@agccert.com.

## 14. Photographs of EUT

Refer to the Report No.: AGC05443260895AP01

Any report having not been signed by authorized approver, or having been altered without authorization, or having not been stamped by the "Dedicated Testing/Inspection Stamp" is deemed to be invalid. Copying or excerpting portion of, or altering the content of the report is not permitted without the written authorization of AGC. The test results presented in the report apply only to the tested sample. Any objections to report issued by AGC should be submitted to AGC within 15days after the issuance of the test report. Further enquiry of validity or verification of the test report should be addressed to AGC by agc01@agccert.com.

# Conditions of Issuance of Test Reports

1. All samples and goods are accepted by the Attestation of Global Compliance (Shenzhen) Co., Ltd (the “Company”) solely for testing and reporting in accordance with the following terms and conditions. The company provides its services on the basis that such terms and conditions constitute express agreement between the company and any person, firm or company requesting its services (the “Clients”).
2. Any report issued by Company as a result of this application for testing services (the “Report”) shall be issued in confidence to the Clients and the Report will be strictly treated as such by the Company. It may not be reproduced either in its entirety or in part and it may not be used for advertising or other unauthorized purposes without the written consent of the Company. The Clients to whom the Report is issued may, however, show or send it, or a certified copy thereof prepared by the Company to its customer, supplier or other persons directly concerned. The Company will not, without the consent of the Clients, enter into any discussion or correspondence with any third party concerning the contents of the Report, unless required by the relevant governmental authorities, laws or court orders.
3.The Company shall not be called or be liable to be called to give evidence or testimony on the Report in a court of law without its prior written consent, unless required by the relevant governmental authorities, laws or court orders.
4. In the event of the improper use of the report as determined by the Company, the Company reserves the right to withdraw it, and to adopt any other additional remedies which may be appropriate.
5. Samples submitted for testing are accepted on the understanding that the Report issued cannot form the basis of, or be the instrument for, any legal action against the Company.
6. The Company will not be liable for or accept responsibility for any loss or damage however arising from the use of information contained in any of its Reports or in any communication whatsoever about its said tests or investigations.
7. Clients wishing to use the Report in court proceedings or arbitration shall inform the Company to that effect prior to submitting the sample for testing.
8. The Company is not responsible for recalling the electronic version of the original report when any revision is made to them. The Client assumes the responsibility to providing the revised version to any interested party who uses them.
9. Subject to the variable length of retention time for test data and report stored hereinto as otherwise specifically required by individual accreditation authorities, the Company will only keep the supporting test data and information of the test report for a period of six years. The data and information will be disposed of after the aforementioned retention period has elapsed. Under no circumstances shall we provide any data and information which has been disposed of after retention period. Under no circumstances shall we be liable for damage of any kind, including (but not limited to) compensatory damages, lost profits, lost data, or any form of special, incidental, indirect, consequential or punitive damages of any kind, whether based on breach of contract of warranty, tort (including negligence), product liability or otherwise, even if we are informed in advance of the possibility of such damages.

**----End of Report----**

Any report having not been signed by authorized approver, or having been altered without authorization, or having not been stamped by the “Dedicated Testing/Inspection Stamp” is deemed to be invalid. Copying or excerpting portion of, or altering the content of the report is not permitted without the written authorization of AGC. The test results presented in the report apply only to the tested sample. Any objections to report issued by AGC should be submitted to AGC within 15days after the issuance of the test report. Further enquiry of validity or verification of the test report should be addressed to AGC by agc01@agccert.com.